# User Manual

# Hybrid 10KW/12KW/15KW PV Inverter

Version: 1.4

# Table Of Contents


1. Introduction ..... 1
2. Important Safety Warning ..... 2
3. Unpacking & Overview ..... 4
   3-1. Packing List ..... 4
   3-2. Product Overview ..... 4
4. Installation ..... 5
   4-1. Precaution ..... 5
   4-2. Selecting Mounting Location ..... 5
   4-3. Mounting Unit ..... 5
5. Grid (Utility) Connection ..... 6
   5-1. Preparation ..... 6
   5-2. Connecting to the AC Utility ..... 7
6. PV Module (DC) Connection ..... 9
7. Battery Connection ..... 13
8. Load (AC Output) Connection ..... 14
   8-1. Preparation ..... 14
   8-2. Connecting to the AC output ..... 14
9. Communication Connection ..... 16
10. Dry Contact Signal ..... 17
   10-1. Electric Parameter ..... 17
   10-2. Function Description ..... 18
11. Application with Energy Meter ..... 19
12. Commissioning ..... 20
13. Initial Setup ..... 21
14. Operation ..... 33
   14-1. Interface ..... 33
   14-2. LCD Information Define ..... 33
   14-3. Touchable function keys ..... 35
   14-4. LCD Setting ..... 36
   14-5. LCD Display Information ..... 44
   14-6. Operation Mode & Display ..... 49
15. Charging Management ..... 53
16. Maintenance & Cleaning ..... 55
17. Trouble Shooting ..... 56
   17-1. Warning List ..... 56
   17-2. Fault Reference Codes ..... 57
18. Specifications ..... 60

Appendix I: Parallel Installation Guide ..... 62
   Introduction ..... 62
   Parallel cable ..... 62
   Overview ..... 62

Mounting the Unit .....63
Wiring Connection .....63
Inverters Configuration .....65
Setting and LCD Display .....68
Commissioning .....71
Trouble shooting .....72
Appendix II: BMS .....73
Appendix III: Wi-Fi Operation Guide .....74

# 1. Introduction

This hybrid PV inverter can provide power to connected loads by utilizing PV power, utility power and battery power.

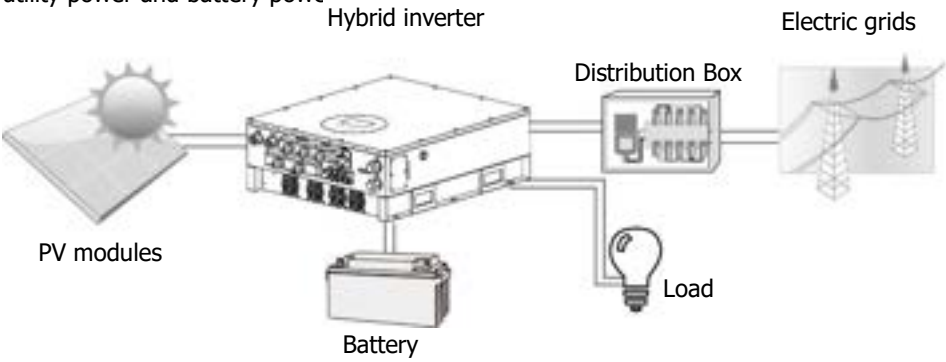


**Figure 1 Basic hybrid PV System Overview**

Depending on different power situations, this hybrid inverter is designed to generate continuous power from PV solar modules (solar panels), battery, and the utility. When MPP input voltage of PV modules is within acceptable range (see specification for the details), this inverter is able to generate power to feed the grid (utility) and charge battery. This inverter is only compatible with PV module types of single crystalline and poly crystalline. Do not connect any PV array types other than these two types of PV modules to the inverter. Do not connect the positive or negative terminal of the solar panel to the ground. See Figure 1 for a simple diagram of a typical solar system with this hybrid inverter.

**Note:** By following the EEG standard, every inverter sold to German area is not allowed to charge battery from Utility. The relevant function is automatically disabled by the software.

# 2. Important Safety Warning

**Before using the inverter, please read all instructions and cautionary markings on the unit and this manual. Store the manual where it can be accessed easily.**

This manual is for qualified personnel. The tasks described in this manual may be performed by qualified personnel only.

**General Precaution-**

**Conventions used:**
**WARNING!** Warnings identify conditions or practices that could result in personal injury;
**CAUTION!** Caution identify conditions or practices that could result in damaged to the unit or other equipment connected.

**WARNING!** Before installing and using this inverter, read all instructions and cautionary markings on the inverter and all appropriate sections of this guide.

**WARNING!** Normally grounded conductors may be ungrounded and energized when a ground fault is indicated.

**WARNING!** This inverter is heavy. It should be lifted by at least two persons.

**CAUTION!** Authorized service personnel should reduce the risk of electrical shock by disconnecting AC, DC and battery power from the inverter before attempting any maintenance or cleaning or working on any circuits connected to the inverter. Turning off controls will not reduce this risk. Internal capacitors can remain charged for 5 minutes after disconnecting all sources of power.

**CAUTION!** Do not disassemble this inverter yourself. It contains no user-serviceable parts. Attempt to service this inverter yourself may cause a risk of electrical shock or fire and will void the warranty from the manufacturer.

**CAUTION!** To avoid a risk of fire and electric shock, make sure that existing wiring is in good condition and that the wire is not undersized. Do not operate the Inverter with damaged or substandard wiring.

**CAUTION!** Under high temperature environment, the cover of this inverter could be hot enough to cause skin burns if accidentally touched. Ensure that this inverter is away from normal traffic areas.

**CAUTION!** Use only recommended accessories from installer. Otherwise, not-qualified tools may cause a risk of fire, electric shock, or injury to persons.

**CAUTION!** To reduce risk of fire hazard, do not cover or obstruct the cooling fan.

**CAUTION!** Do not operate the Inverter if it has received a sharp blow, been dropped, or otherwise damaged in any way. If the Inverter is damaged, please call for an RMA (Return Material Authorization).

**CAUTION!** AC breaker, DC switch and Battery circuit breaker are used as disconnect devices and these disconnect devices shall be easily accessible.

**Before working on this circuit**

- Isolate inverter/Uninterruptible Power System (UPS)
- Then check for Hazardous Voltage between all terminals including the protective earth.

**Risk of Voltage Backfeed**

**Symbols used in Equipment Markings**

| | |
|---|---|
| | Refer to the operating instructions |
| | Caution! Risk of danger |
| | Caution! Risk of electric shock |
| | Caution! Risk of electric shock. Energy storage timed discharge for 5 minutes. |
| | Caution! Hot surface |

# 3. Unpacking & Overview

## 3-1. Packing List

Before installation, please inspect the unit. Be sure that nothing inside the package is damaged. You should have received the following items inside of package:

Inverter unit

PV connectors

AC connector

Fixing screws

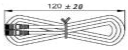
Parallel cables

Software CD

Manual

RS-232 cable

Share current cable

## 3-2. Product Overview

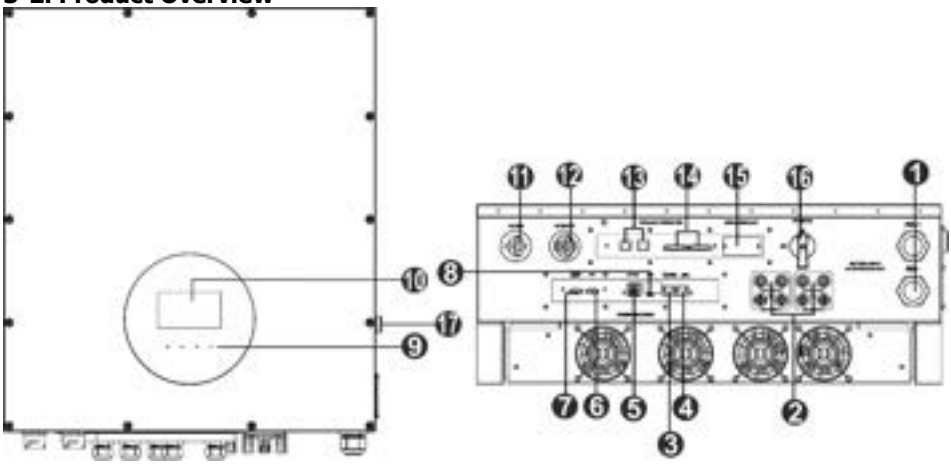


1) Battery connectors
2) PV connectors
3) RS-232 communication port
4) BMS
5) Dry contact
6) EPO
7) Battery thermal sensor
8) USB communication port
9) Touchable buttons
10) LCD display panel (Please check section 14 for detailed LCD operation)
11) AC Grid connectors
12) AC output connectors (Load connection)
13) Parallel communication port
14) Current sharing port
15) Intelligent slot
16) DC switch
17) Cold start button

# 4. Installation

## 4-1. Precaution

This Hybrid inverter is designed for indoor or outdoor use (IP65), please make sure the installation site meets below conditions:

- Not in direct sunlight
- Not in areas where highly flammable materials are stored.
- Not in potential explosive areas.
- Not in the cool air directly.
- Not near the television Antenna or antenna cable.
- Not higher than altitude of about 2000 meters above sea level.
- Not in environment of precipitation or humidity (>95%)

Please AVOID direct sunlight, rain exposure, snow laying up during installation and operation.

## 4-2. Selecting Mounting Location

- Please select a vertical wall with load-bearing capacity for installation, appropriate for installation on concrete or other non-flammable surfaces.
- The ambient temperature should be between -25~60℃ to ensure optimal operation.
- Be sure to keep other objects and surfaces as shown in the diagram to guarantee sufficient heat dissipation and have enough space for removing wires.
- For proper air ventilation to dissipate heat, allow a clearance of approx. 50cm to the side and approx. 50cm above and below the unit. And 100cm toward the front.

## 4-3. Mounting Unit

**WARNING!!** Remember that this inverter is heavy! Please be carefully when lifting out from the package.

Installation to the wall should be implemented with the proper screws. After that, the device should be bolted on securely.

**WARNING!!** FIRE HAZARD.
SUITABLE FOR MOUNTING ON CONCRETE OR OTHER NON-COMBUSTIBLE SURFACE ONLY.

1. Drill six holes in the marked locations with supplied six screws. The reference tightening torque is 35 N.m.

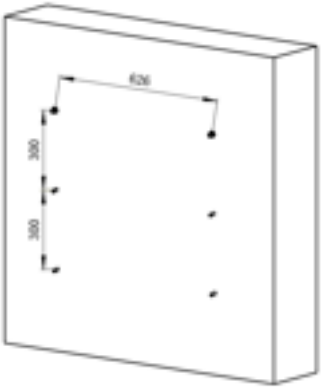


2. Fix the inverter on the wall.

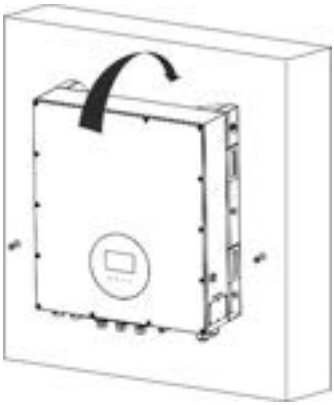

3. Check if the inverter is firmly secured.

# 5. Grid (Utility) Connection

## 5-1. Preparation

**NOTE:** The overvoltage category of the AC input is III. It should be connected to the power distribution.

**NOTE2:** Before connecting to grid, please install a separate AC breaker between inverter and grid. The recommended of AC breaker is 40A.

**WARNING!** It's very important for system safety and efficient operation to use appropriate cable for grid (utility) connection. To reduce risk of injury, please use the proper recommended cable size as below.

Suggested cable requirement for AC wire:

| | |
|---|---|
| Nominal Grid Voltage | 230VAC per phase |
| Conductor cross-section ($mm^2$) | 10-16 |
| AWG no. | 8-6 |

## 5-2. Connecting to the AC Utility

Overview of AC Connection Socket

| Component | Description |
|---|---|
| A | Pressure dome |
| B | Plastic ring |
| C | Protective element |
| D | Socket element |

Step 1: Check the grid voltage and frequency with an AC voltmeter. It should be the same to "VAC" value on the product label.
Step 2: Turn off the circuit breaker.
Step 3: Remove insulation sleeve 13 mm for five conductors.
Step 4: Thread the five cables through pressure dome (A), plastic ring (B) and protective element (C) in sequence.

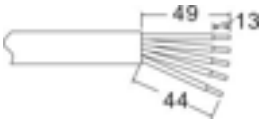


Step 5: Thread five cables through socket element (D) according to polarities indicated on it and tighten the screws to fix wires after connection.

**L1→ LINE 1 (Black)**
**L2→ LINE 2 (Grey)**
**L3→ LINE 3 (Brown)**
**⏚→ Ground (Yellow-Green)**
**N→ Neutral (Blue)**

The reference tightening torque is 1.5-2.5 N.m.
Step 6: Push protective element (C) on to socket element (D) until both are locked tightly. Then, twist protective element (C) and pressure dome (A) so that all cables are firmly connected.

Step 7: Plug the AC connection socket into AC grid terminal of the inverter.

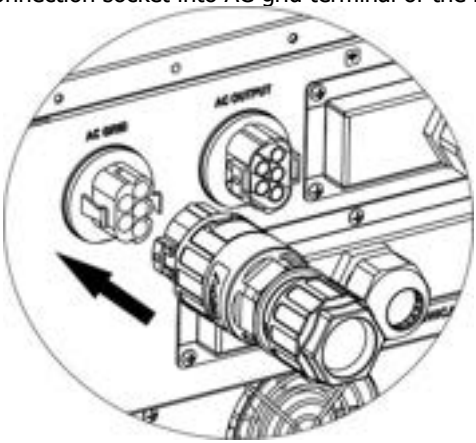


**CAUTION:** To prevent risk of electric shock, ensure the ground wire is properly earthed before operating this hybrid inverter no matter the grid is connected or not.

# 6. PV Module (DC) Connection

**NOTE1:** Please use 1000VDC/20A circuit breaker.
**NOTE2:** The overvoltage category of the PV input is II.
Please follow below steps to implement PV module connection:

> **WARNING:** Because this inverter is non-isolated, only two types of PV modules are acceptable: single crystalline and poly crystalline with class A-rated.
> To avoid any malfunction, do not connect any PV modules with possibility of leakage current to the inverter. For example, grounded PV modules will cause leakage current to the inverter.
> **CAUTION:** It's requested to have PV junction box with surge protection. Otherwise, it will cause inverter damage when lightning occurs on PV modules.

Step 1: Check the input voltage of PV array modules. The acceptable input voltage of the inverter is 350VDC - 1000VDC. This system is only applied with two strings of PV array. Please make sure that the maximum current load of each PV input connector is 23A.

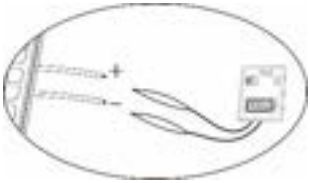


> **CAUTION:** Exceeding the maximum input voltage can destroy the unit!! Check the system before wire connection.

Step 2: Disconnect the circuit breaker and switch off the DC switch.

Step 3: Assemble provided PV connectors with PV modules by the following below steps.
**Components for PV connectors and Tools:**

| | |
|---|---|
| Female connector housing | |
| Female terminal | |
| Male connector housing | |
| Male terminal | |

| | |
|---|---|
| Crimping tool and spanner | |

**Cable preparation and connector assembly process:**

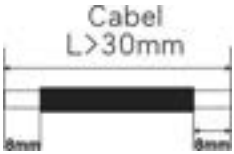


Strip one cable 8 mm on both end sides and be careful NOT to nick conductors.

Insert striped cable into female terminal and crimp female terminal as shown below charts.

Insert assembled cable into female connector housing as shown below charts.

Insert striped cable into male terminal and crimp male terminal as shown below charts.

Insert assembled cable into male connector housing as shown below charts.

Then, use spanner to screw pressure dome tightly to female connector and male connector as shown below.

Step 4: Check correct polarity of connection cable from PV modules and PV input connectors. Then, connect positive pole (+) of connection cable to positive pole (+) of PV input connector. Connect negative pole (-) of connection cable to negative pole (-) of PV input connector.

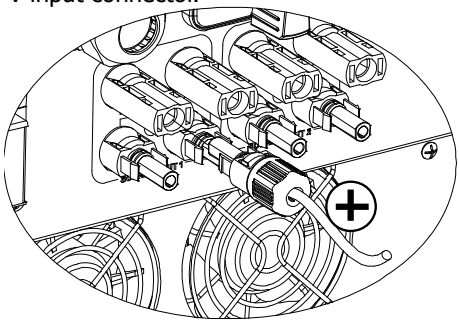

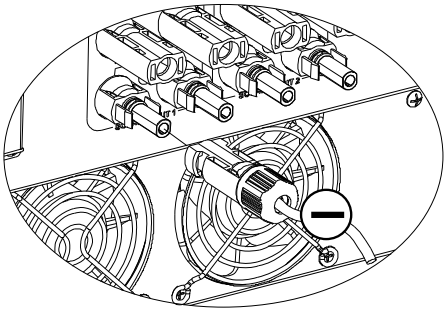

**WARNING!** It's very important for system safety and efficient operation to use appropriate cable for PV module connection. To reduce risk of injury, please use the proper recommended cable size as below.

| Conductor cross-section ($mm^2$) | AWG no. |
|---|---|
| 6 | 10 |

**CAUTION: Never** directly touch terminals of the inverter. It will cause lethal electric

**CAUTION:** Do NOT touch the inverter to avoid electric shock. When PV modules are exposed to sunlight, it may generate DC voltage to the inverter.

**Recommended Panel Configuration**

| | Solar panel | | | |
|---|---|---|---|---|
| Nominal Max. Power (Pmax) (W) | 430 | 455 | 520 | 535 |
| Opt. Operating Voltage (Vmp) (V) | 40.3 | 41.3 | 41.6 | 41.9 |
| Opt. Operating Current (Imp) (A) | 10.68 | 11.02 | 12.5 | 12.77 |
| Open Circuit Voltage (Voc) (V) | 48.3 | 49.3 | 49.14 | 49.44 |
| Short Circuit Current (Isc) (A) | 11.37 | 11.66 | 13.23 | 13.5 |
| | | | | |
| For 16KW input recommendation | | | | |
| **Numbers in series of MPPT1** | 19 | 18 | 16 | 15 |
| **Numbers of strings in MPPT1** | 1 | 1 | 1 | 1 |
| Maximum input voltage of MPPT1 (V) | 917.7 | 887.4 | 786.24 | 741.6 |
| Input power of MPPT1 (W) | 8170 | 8190 | 8320 | 8025 |
| **Numbers in series of MPPT2** | 19 | 18 | 16 | 15 |
| **Numbers of strings in MPPT2** | 1 | 1 | 1 | 1 |
| Maximum input voltage of MPPT1 (V) | 917.7 | 887.4 | 786.24 | 741.6 |
| Input power of MPPT2 (W) | 8170 | 8190 | 8320 | 8025 |
| Total input power (W) | 16340 | 16380 | 16640 | 16050 |
| | | | | |
| Minimum input recommendation | | | | |
| **Numbers in series of MPPT1** | 10 | 10 | 10 | 10 |
| **Numbers of strings in MPPT1** | 1 | 1 | 1 | 1 |
| Maximum input voltage of MPPT1 (V) | 483 | 493 | 491.4 | 494.4 |
| Input power of MPPT1 (W) | 4300 | 4550 | 5200 | 5350 |
| **Numbers in series of MPPT2** | 10 | 10 | 10 | 10 |
| **Numbers of strings in MPPT2** | 1 | 1 | 1 | 1 |
| Maximum input voltage of MPPT1 (V) | 483 | 493 | 491.4 | 494.4 |
| Input power of MPPT2 (W) | 4300 | 4550 | 5200 | 5350 |

# 7. Battery Connection

**CAUTION:** Before connecting to batteries, please install **separately** a DC circuit breaker between inverter and batteries.

**NOTE1:** Please only use sealed lead acid battery, vented and Gel battery. Please check maximum charging voltage and current when first using this inverter. If using Lithium iron or Nicd battery, please consult with installer for the details.

**NOTE2:** Please use 60VDC/300A circuit breaker.

**NOTE3:** The overvoltage category of the battery input is II.

Please follow below steps to implement battery connection:

Step 1: Check the nominal voltage of batteries. The nominal input voltage for inverter is 48VDC.

Step 2: Use two battery cables. Remove insulation sleeve 12 mm and insert conductor into cable ring terminal. Refer to right chart.

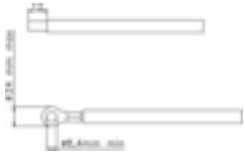

Step 3: Remove battery cover and follow battery polarity guide printed near the battery terminal! Place the external battery cable ring terminal over the battery terminal.

**RED cable to the positive terminal (+);**
**BLACK cable to the negative terminal (-).**

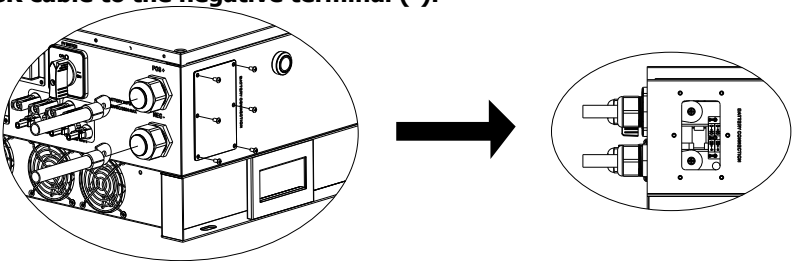

**WARNING!** Wrong connections will damage the unit permanently.

Step 4: Make sure the wires are securely connected. The reference tightening torque is 5.5~7.0 N.m.

**WARNING!** It's very important for system safety and efficient operation to use appropriate cable for battery connection. To reduce risk of injury, please use the proper recommended cable size as below.

| Model | Nominal Battery Voltage | Conductor cross-section ($mm^2$) | AWG no. | Protective earthing (battery side) |
|---|---|---|---|---|
| 10 KW/ 12 KW | 48V | 107 | 4/0 | 150$mm^2$ (300kcmil) |
| 15 KW | 48V | 151 | 300 | 150$mm^2$ (300kcmil) |

# 8. Load (AC Output) Connection

## 8-1. Preparation

**CAUTION:** To prevent further supply to the load via the inverter during any mode of operation, an additional disconnection device should be placed on in the building wiring installation.

**WARNING!** It's very important for system safety and efficient operation to use appropriate cable for AC connection. To reduce risk of injury, please use the proper recommended cable size as below.

| | |
|---|---|
| Nominal Grid Voltage | 208/220/230/240 VAC per phase |
| Conductor cross-section ($mm^2$) | 5.5-10 |
| AWG no. | 10-8 |

## 8-2. Connecting to the AC output

Overview of Load Connection Socket

| Component | Description |
|---|---|
| A | Pressure dome |
| B | Plastic ring |
| C | Protective element |
| D | Socket element |

Step 1: Remove insulation sleeve 8.5 mm for five conductors.

Step 2: Thread the five cables through pressure dome (A), plastic ring (B) and protective element (C) in sequence.

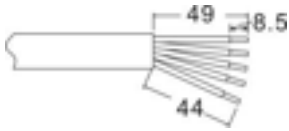


Step 3: Thread five cables through socket element (D) according to polarities indicated on it and tighten the screws to fix wires after connection.

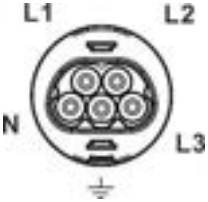


**L1→ LINE 1 (Black)**

**L2→ LINE 2 (Grey)**

**L3→ LINE 3 (Brown)**

**⏚→ Ground (Yellow-Green)**

**N→ Neutral (Blue)**

The reference tightening torque is 1.0-1.5 N.m.

Step 4: Push protective element (C) on to socket element (D) until both are locked tightly. Then, twist protective element (C) and pressure dome (A) so that all cables are firmly connected.

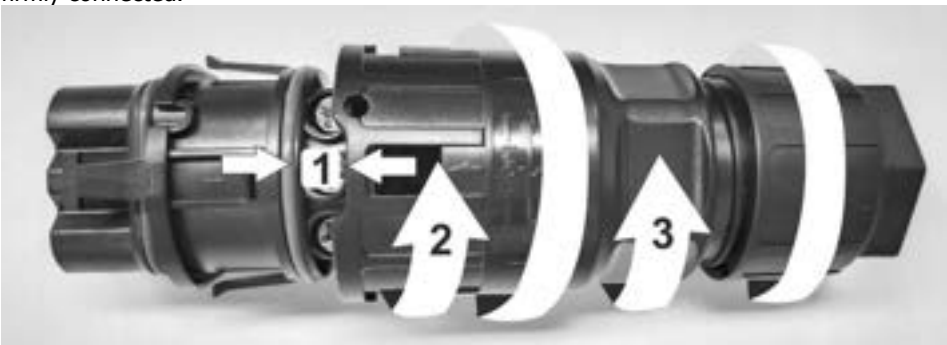


Step 5: Plug the socket into the terminal.

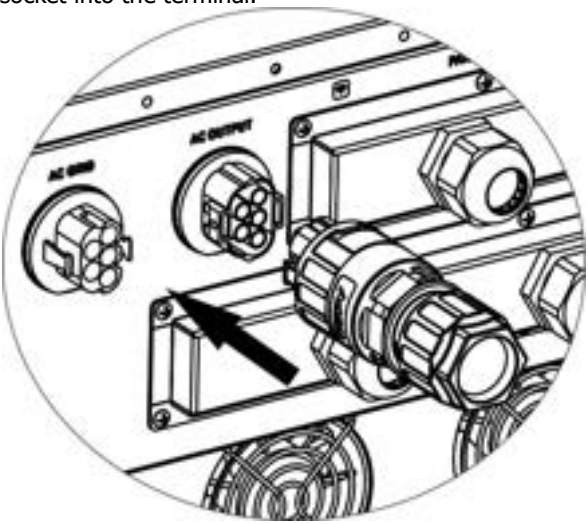


**CAUTION:** It's only allowed to connect load to "AC Output Connector". Do NOT connect the utility to "AC Output Connector".
**CAUTION**: Be sure to connect L terminal of load to L terminal of "AC Output Connector" and N terminal of load to N terminal of "AC Output Connector". The G terminal of "AC Output Connector" is connected to grounding of the load. Do NOT mis-connect.

# 9. Communication Connection

**Serial Connection**

The inverter is equipped with several communication ports and it is also equipped with a slot for alternative communication interfaces in order to communicate with a PC with corresponding software. This intelligent slot is suitable to install with SNMP card and Modbus card. Follow below procedure to connect communication wiring and install the software.

| | |
|---|---|
| For RS232 or BMS port, use a RJ45 cable as follows: | For USB port, use a USB cable as follows: |
| 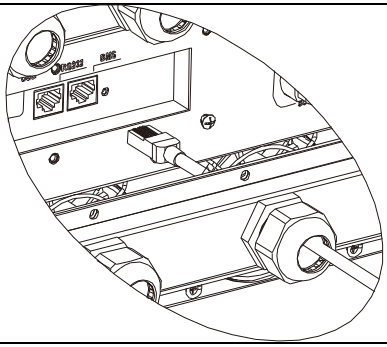 | 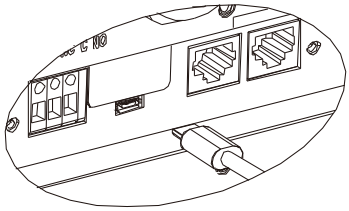 |
| For Dry contact port, please remove insulation sleeve 8 mm for three conductors and insert three cables into ports | For SNMP or MODBUS port, use the RJ45 cables as follows: |
| 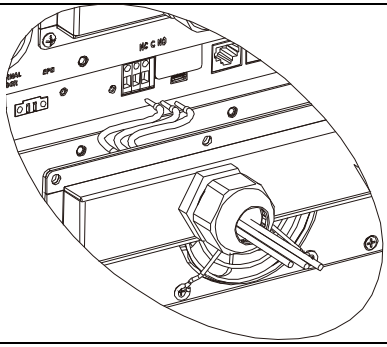 | 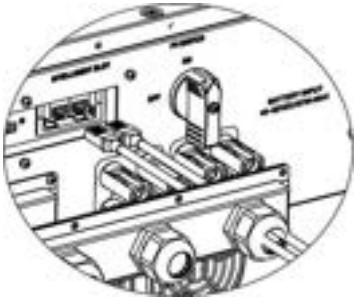 |

Please install monitoring software in your computer. Detailed information is listed in the chapter 12. After software is installed, you may initial the monitoring software and extract data through communication port.

**Wi-Fi Connection**

Wi-Fi module can enable wireless communication between off-grid inverters and monitoring platform. Users have complete and remote monitoring and controlling experience for inverters when combining Wi-Fi module with SolarPower APP, available for both iOS and Android based device. All data loggers and parameters are saved in iCloud.

For quick installation and operation, please refer to Appendix III - The Wi-Fi Operation Guide for details.

## 10. Dry Contact Signal

There is one dry contact available on the bottom panel. It could be used to remote control for external generator.

### 10-1. Electric Parameter

| Parameter | Symbol | Max. | Unit |
|---|---|---|---|
| Relay DC voltage | Vdc | 30 | V |
| Relay DC current | Idc | 1 | A |

Note: The application of the dry contact should not exceed the electric parameter shown as above. Otherwise, the internal relay will be damaged.

## 10-2. Function Description

| Unit Status | Condition | Dry contact port: | |
|---|---|---|---|
| | | NO&C | NC&C |
| Power Off | Unit is off and no output is powered. | Open | Close |
| Power On | Battery voltage is lower than setting battery cut-off discharging voltage when grid is available. | Close | Open |
| | Battery voltage is lower than setting battery cut-off discharging voltage when grid is unavailable. | Close | Open |
| | Battery voltage is higher than below 2 setting values:<br>1. Battery re-discharging voltage when grid is available.<br>2. Battery re-discharging voltage when grid unavailable. | Open | Close |

You can set the related parameters in software. Refer to below chart:

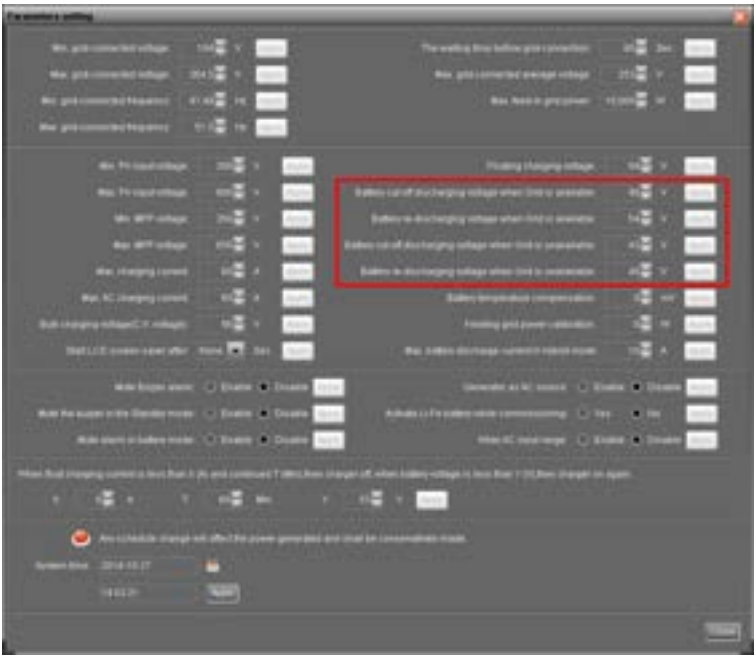

# 11. Application with Energy Meter

With Modbus card II and energy meter, hybrid inverter can be easily integrated into the existing household system. For details please refer to Modbus card II manual.

**Note:** this application is only valid for **Grid-Tie with Backup II** mode.

Equipped with Modbus card II, hybrid inverter is connected to energy meter with RS485 communication port. It's to arrange self-consumption via Modbus card to control power generation and battery charging of the inverter.

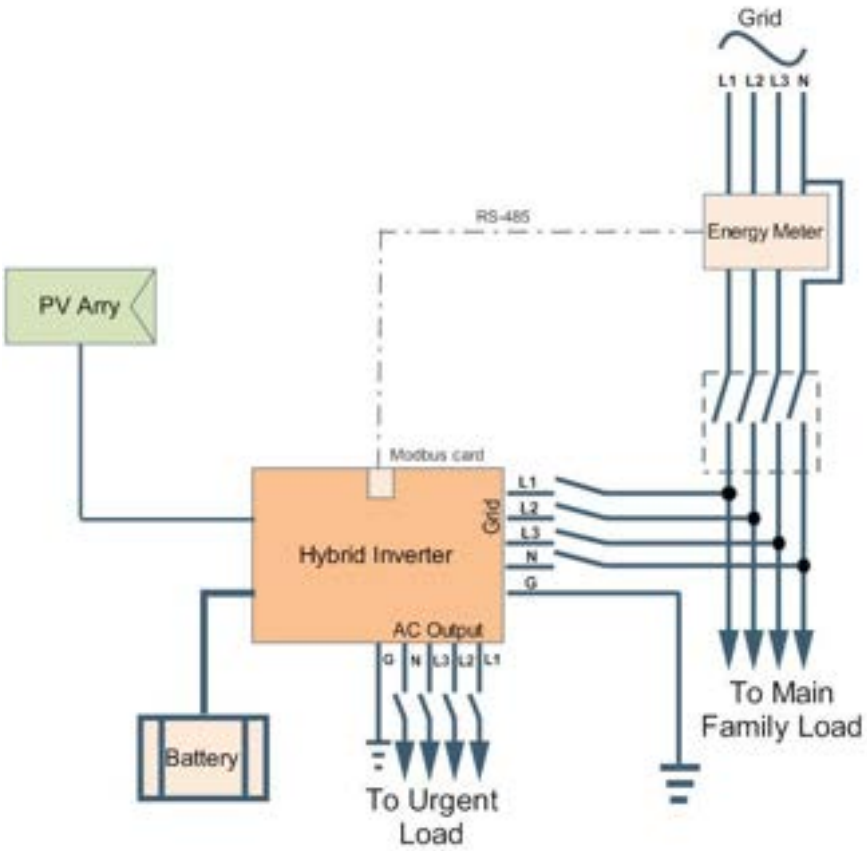

# 12. Commissioning

Step 1: Check the following requirements before commissioning:

- Ensure the inverter is firmly secured
- Check if the open circuit DC voltage of PV module meets requirement (Refer to Section 6)
- Check if the open circuit utility voltage of the utility is at approximately same to the nominal expected value from local utility company.
- Check if connection of AC cable to grid (utility) is correct if the utility is required.
- Full connection to PV modules.
- AC circuit breaker (only applied when the utility is required), batter circuit breaker, and DC circuit breaker are installed correctly.

Step 2: Switch on the battery circuit breaker and then switch on PV DC breaker. After that, if there is utility connection, please switch on the AC circuit breaker. At this moment, the inverter is turned on already. However, there is no output generation for loads. Then:

- If LCD lights up to display the current inverter status, commissioning has been successfully. After pressing "↵" button for 1 second when the utility is detected, this inverter will start to supply power to the loads. If no utility exists, simply press "↵" button for 3 seconds. Then, this inverter will start to supply power to the loads.
- If a warning/fault indicator appears in LCD, an error has occurred to this inverter. Please inform your installer.

NOTE: If only battery is available and LCD is off, press "Cold start button" to light up the LCD display.

Step 3: Please insert CD into your computer and install monitoring software in your PC. Follow below steps to install software.

1. Follow the on-screen instructions to install the software.
2. When your computer restarts, the monitoring software will appear as shortcut icon located in the system tray, near the clock.

**NOTE:** If using modbus card as communication interface, please install bundled software. Check local dealer for the details.

# 13. Initial Setup

Before inverter operation, it's required to set up "Operation Mode" via software. Please strictly follow below steps to set up. For more details, please check software manual.

**Step 1:** After turning on the inverter and installing the software, please click "Open Monitor" to enter main screen of this software.

**Step 2:** Log in into software first by entering default password "administrator".

**Step 3:** Select Device Control>>MyPower Management. It is to set up inverter operation mode and personalized interface. Refer to diagram below.

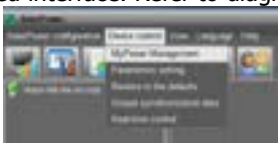

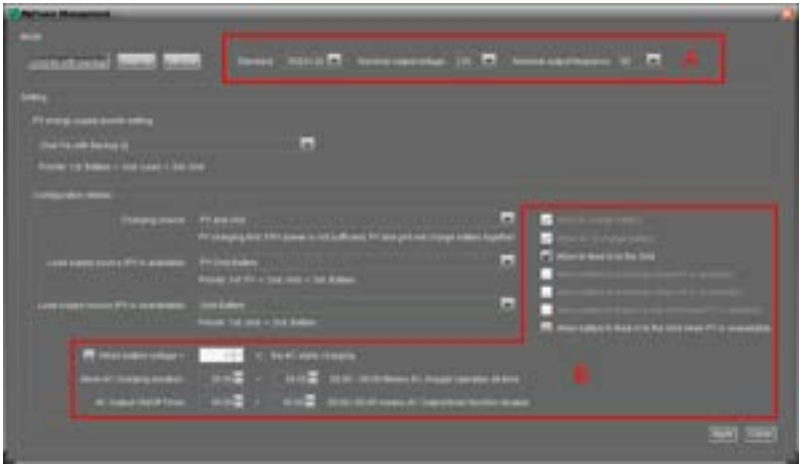

**Mode**

There are three operation modes: Grid-tie with backup, Grid-Tie and Off-Grid.

- Grid-tie with backup: PV power can feed-in back to grid, provide power to the load and charge battery. There are four options available in this mode: Grid-tie with backup I, II, III and IV. In this mode, users can configure *PV power supply priority, charging source priority and load supply source priority.* However, when Grid-tie with backup IV option is selected in PV energy supply priority, the inverter is only operated between two working logics based on defined peak time and off-peak time of electricity. Only peak time and off-peak time of electricity are able to set up for optimized electricity usage.
- Grid-Tie: PV power only can feed-in back to grid.
- Off-Grid: PV power only provides power to the load and charge battery. No feed-in back to grid is allowed.

**SECTION A:**

Standard: It will list local grid standard. It's requested to have factory password to make any modifications. Please check local dealer only when this standard change is requested.

**CAUTION:** Wrong setting could cause the unit damage or not working.

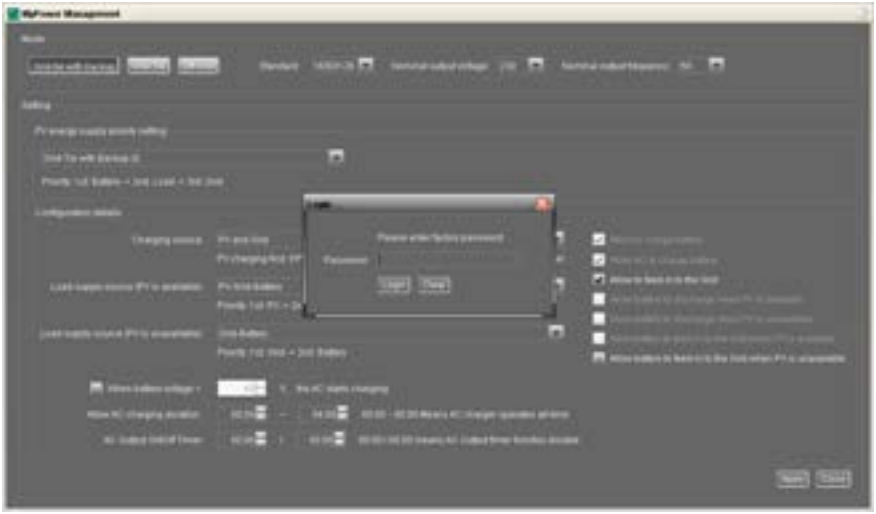

Nominal Output Voltage: 230V.

Nominal Output Frequency: 50HZ.

**SECTION B:**

This section contents may be different based on different selected types of operations.

Allow AC charging duration: It's a period time to allow AC (grid) to charge battery. When the duration is set up as 0:00-00:00, it means no time limitation for AC to charge battery.

AC output ON/Off Timer: Set up on/off time for AC output of inverter. If setting it as 00:00/00:00, this function is disabled.

Allow to charge battery: This option is automatically determined by setting in "Charging source". It's not allowed to modify here. When "NONE" is selected in charging source section, this option becomes unchecked as grey text.
Allow AC to charge battery: This option is automatically determined by setting in "Charging source". It's not allowed to modify here. When "Grid and PV" or "Grid or PV" is selected in charging source section, this option is default selected. Under Grid-tie mode, this option is invalid.

Allow to feed-in to the Grid: This option is only valid under Grid-tie and Grid-tie with backup modes. Users can decide if this inverter can feed-in to the grid.

Allow battery to discharge when PV is available: This option is automatically determined by setting in "Load supply source (PV is available)". When "Battery" is higher priority than "Grid" in Load supply source (PV is available), this option is default selected. Under Grid-tie, this option is invalid.

Allow battery to discharge when PV is unavailable: This option is automatically determined by setting in "Load supply source (PV is unavailable)". When "Battery" is higher priority than "Grid" in Load supply source (PV is unavailable), this option is default selected. Under Grid-tie mode, this option is invalid.

Allow battery to feed-in to the Grid when PV is available: This option is only valid in Grid-tie with backup II or Grid-tie with backup III modes.

Allow battery to feed-in to the Grid when PV is unavailable: This option is only valid in all options of Grid-tie with backup mode.

**Grid-tie with backup**

- Grid-tie with backup (I) :

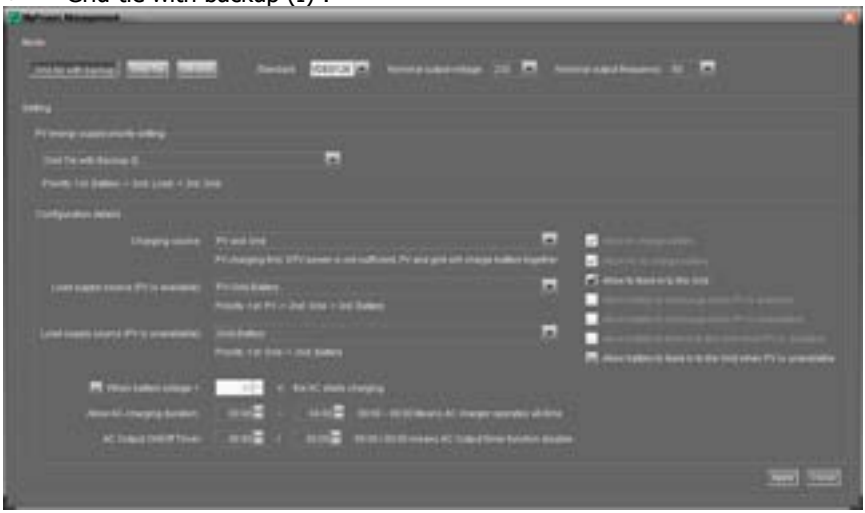

PV energy supply priority setting: 1st Battery, 2nd Load and 3rd Grid.
PV power will charge battery first, then provide power to the load. If there is any remaining power left, it will feed-in to the grid.
Battery charging source:
1. PV and Grid (Default)

It's allowed to charge battery from PV power first. If it's not sufficient, grid will charge battery.

2. PV only

It is only allow PV power to charge battery.

3. None

It is not allowed to charge battery no matter it's from PV power or grid.

Load supply source:

When PV power is available: 1st PV, 2nd Grid, 3rd Battery

If battery is not fully charged, PV power will charge battery first. And remaining PV power will provide power to the load. If it's not sufficient, grid will provide power to the load. If grid is not available at the same time, battery power will back up.

When PV power is not available:

1. 1st Grid, 2nd Battery (Default)

Grid will provide power to the load at first. If grid is not available, battery power will provide power backup.

2. 1st Battery, 2nd Grid

Battery power will provide power to the load at first. If battery power is running out, grid will back up the load.

**NOTE:** This option will become ineffective during AC charging time and the priority will automatically become 1st Grid and 2nd Battery order. Otherwise, it will cause battery damage.

- Grid-tie with backup (II) :

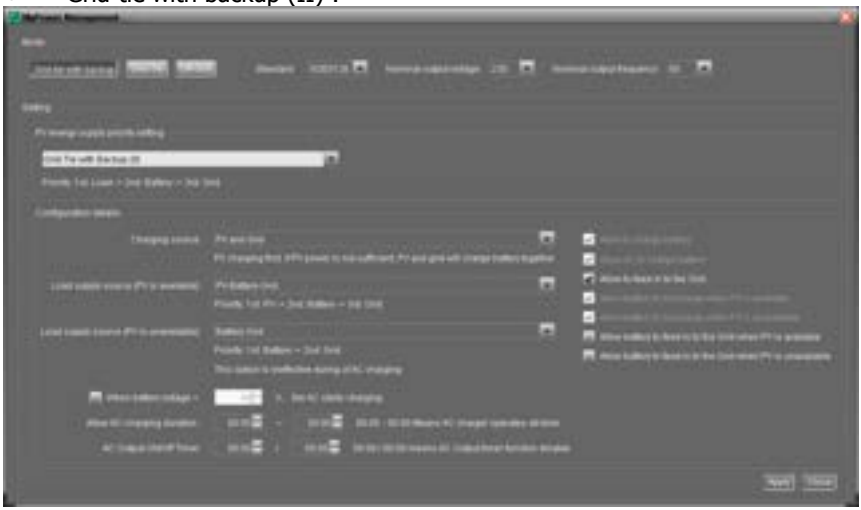

PV energy supply priority setting: 1st Load, 2nd Battery and 3rd Grid.
PV power will provide power to the load first. Then, it will charge battery. If there is any remaining power left, it will feed-in to the grid.
Battery charging source:
1. PV and Grid
It's allowed to charge battery from PV power first. If it's not sufficient, grid will charge battery.
2. PV only
It is only allow PV power to charge battery.
3. None
It is not allowed to charge battery no matter it's PV power or grid.
Load supply source:
When PV power is available:
1. 1st PV, 2nd Battery, 3rd Grid
PV power will provide power to the load first. If it's not sufficient, battery power will provide power to the load. When battery power is running out or not available, grid will back up the load.
2. 1st PV, 2nd Grid, 3rd Battery
PV power will provide power to the load first. If it's not sufficient, grid will provide power to the load. If grid is not available at the same time, battery power will back up.

When PV power is not available:
1. 1st Grid, 2nd Battery: Grid will provide power to the load at first. If grid is not available, battery power will provide power backup.
2. 1st Battery, 2nd Grid: Battery power will provide power to the load at first. If battery power is running out, grid will back up the load
**NOTE:** This option will become ineffective during AC charging time and the priority will automatically become 1st Grid and 2nd Battery order. Otherwise, it will cause battery damage.

- Grid-tie with backup (III):

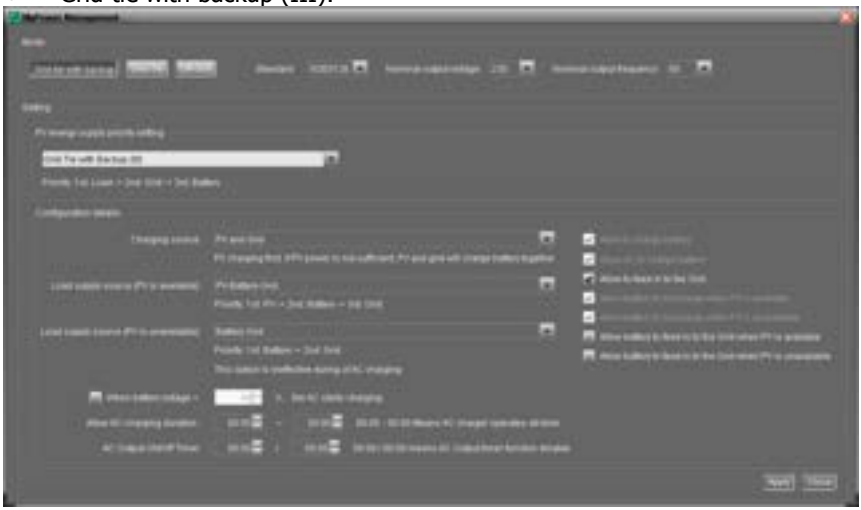

PV energy supply priority setting: 1st Load, 2nd Grid and 3rd Battery
PV power will provide power to the load first. If there is more PV power available, it will feed-in to the grid. If feed-in power reaches max. feed-in power setting, the remaining power will charge battery.
**NOTE:** The max. feed-in grid power setting is available in parameter setting. Please refer to software manual.

Battery charging source:
1. PV and Grid: It's allowed to charge battery from PV power first. If it's not sufficient, grid will charge battery.
2. PV only: It is only allow PV power to charge battery.
3. None: It is not allowed to charge battery no matter it's PV power or grid.

Load supply source:
When PV power is available:
1. 1st PV, 2nd Battery, 3rd Grid
PV power will provide power to the load first. If it's not sufficient, battery power will provide power to the load. When battery power is running out or not available, grid will back up the load.
2. 1st PV, 2nd Grid, 3rd Battery
PV power will provide power to the load first. If it's not sufficient, grid will provide power to the load. If grid is not available at the same time, battery power will back up.

When PV power is not available:
1. 1st Grid, 2nd Battery: Grid will provide power to the load at first. If grid is not available, battery power will provide power backup.
2. 1st Battery, 2nd Grid: Battery power will provide power to the load at first. If

battery power is running out, grid will back up the load.
**NOTE:** This option will become ineffective during AC charging time and the priority will automatically become 1st Grid and 2nd Battery order. Otherwise, it will cause battery damage.

- Grid-tie with backup (IV): Users are only allowed to set up peak time and off-peak electricity demand.

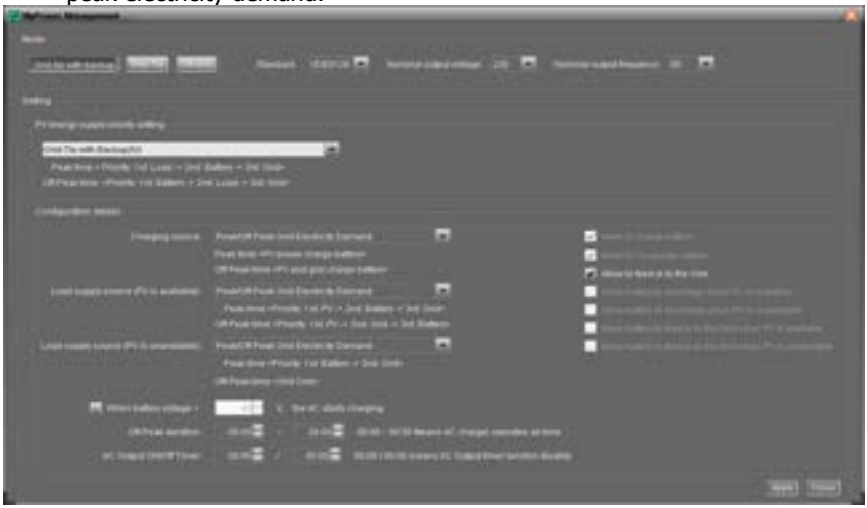

**Working logic under peak time:**
PV energy supply priority: 1st Load, 2nd Battery and 3rd Grid
PV power will provide power to the load first. If PV power is sufficient, it will charge battery next. If there is remaining PV power left, it will feed-in to the grid. Feed-in to the grid is default disabled.
Battery charging source: PV only
Only after PV power fully supports the load, the remaining PV power is allowed to charge battery during peak time.
Load supply source: 1st PV, 2nd Battery, 3rd Grid
PV power will provide power to the load first. If PV power is not sufficient, battery power will back up the load. If battery power is not available, grid will provide the load. When PV power is not available, battery power will supply the load first. If battery power is running out, grid will back up the load.

**Working logic under off-peak time:**
PV energy supply priority: 1st Battery, 2nd Load and 3rd Grid
PV power will charge battery first. If PV power is sufficient, it will provide power to the loads. The remaining PV power will feed to the grid.
**NOTE:** The max. feed-in grid power setting is available in parameter setting. Please refer to software manual.

Battery charging source: PV and grid charge battery
PV power will charge battery first during off-peak time. If it's not sufficient, grid will charge battery.
Load supply source: 1st PV, 2nd Grid, 3rd Battery
When battery is fully charged, remaining PV power will provide power to the load first. If PV power is not sufficient, grid will back up the load. If grid power is not available, battery power will provide power to the load.

**Grid-Tie**

Under this operation mode, PV power only feeds-in to the grid. No priority setting is available.

**Off-Grid**

- Off-Grid (I): Default setting for off-grid mode.

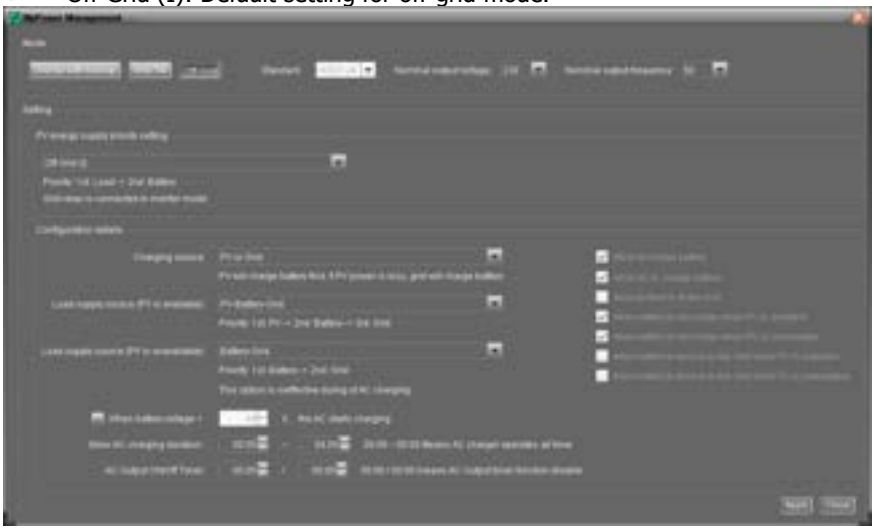

PV energy supply priority setting: 1st Load, 2nd Battery

PV power will provide power to the load first and then charge battery. Feed-in to the grid is not allowed under this mode. At the same time, the grid relay is connected in Inverter mode. That means the transfer time from inverter mode to battery mode will be less than 15ms. Besides, it will avoid overload fault because grid can supply load when connected load is over rated output capacity of the inverter.

Battery charging source:

1. PV or Grid: If there is remaining PV power after supporting the loads, it will charge battery first. Only until PV power is not available, grid will charge battery. (Default)
2. PV only: It is only allow PV power to charge battery.
3. None: It is not allowed to charge battery no matter it's PV power or grid.

Load supply source:

When PV power is available:

1. 1st PV, 2nd Battery, 3rd Grid (Default)

PV power will provide power to the load first. If it's not sufficient, battery power will provide power to the load. When battery power is running out or not available, grid will back up the load.

2. 1st PV, 2nd Grid, 3rd Battery

PV power will provide power to the load first. If it's not sufficient, grid will provide power to the load. If grid is not available at the same time, battery power will back up.

When PV power is not available:

1. 1st Grid, 2nd Battery

Grid will provide power to the load at first. If grid is not available, battery power will provide power backup.

2. 1st Battery, 2nd Grid (Default)

Battery power will provide power to the load at first. If battery power is running out, grid will back up the load.

**NOTE:** This option will become ineffective during AC charging time and the priority will automatically become 1st Grid and 2nd Battery order. Otherwise, it will cause battery damage.

- Off-Grid (II)

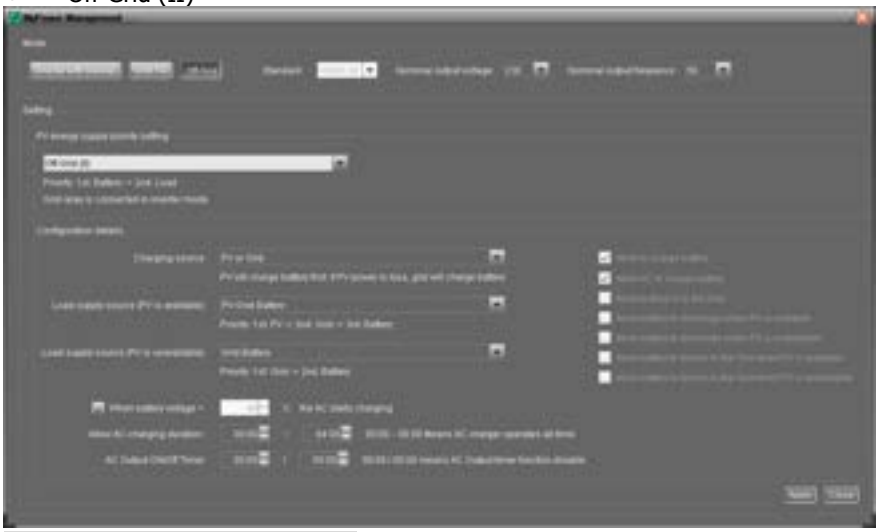

PV energy supply priority setting: 1st Battery, 2nd Load

PV power will charge battery first. After battery is fully charged, if there is remaining PV power left, it will provide power to the load. Feed-in to the grid is not allowed under this mode. At the same time, the grid relay is connected in Inverter mode. That means the transfer time from inverter mode to battery mode will be less than 15ms. Besides, it will avoid overload fault because grid can supply load when connected load is over rated output capacity of the inverter.

Battery charging source:

1. PV or Grid: If there is remaining PV power after supporting the loads, it will charge battery first. Only until PV power is not available, grid will charge battery.
2. PV only: It is only allow PV power to charge battery.
3. None: It is not allowed to charge battery no matter it's PV power or grid.

**NOTE:** It's allowed to set up AC charging duration.

Load supply source:

When PV power is available: 1st PV, 2nd Grid, 3rd Battery

PV power will provide power to the load first. If it's not sufficient, grid will provide power to the load. If grid is not available at the same time, battery power will back

up.

When PV power is not available:

1. 1st Grid, 2nd Battery: Grid will provide power to the load at first. If grid is not available, battery power will provide power backup.
2. 1st Battery, 2nd Grid: Battery power will provide power to the load at first. If battery power is running out, grid will back up the load.

**NOTE:** This option will become ineffective during AC charging time and the priority will automatically become 1st Grid and 2nd Battery order. Otherwise, it will cause battery damage.

- Off-Grid (III)

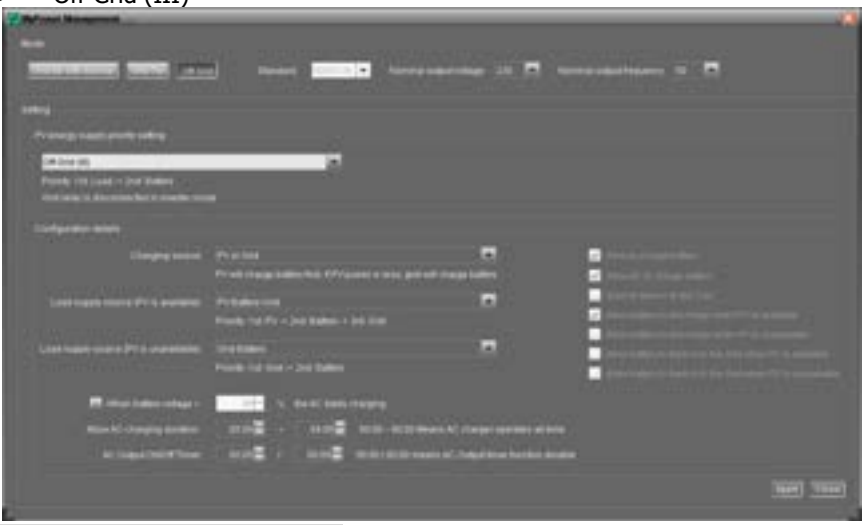

PV energy supply priority setting: 1st Load, 2nd Battery

PV power will provide power to load first and then charge battery. Feed-in to the grid is not allowed under this mode. The grid relay is NOT connected in Inverter mode. That means the transfer time from inverter mode to battery mode will be about 15ms. If connected load is over rated output capacity of the inverter and grid is available, this inverter will allow grid to provide power to the loads and PV power to charge battery. Otherwise, this inverter will activate fault protection.

Battery charging source:

1. PV or Grid: If there is remaining PV power after supporting the loads, it will charge battery first. Only until PV power is not available, grid will charge battery.
2. PV only: It is only allow PV power to charge battery.
3. None: It is not allowed to charge battery no matter it's PV power or grid.

**NOTE:** It's allowed to set up AC charging duration.

Load supply source:

When PV power is available: 1st PV, 2nd Battery, 3rd Grid

PV power will provide power to the load first. If it's not sufficient, battery power will back up the load. Only after battery power is running, Grid will back up the load.

When PV power is not available:

1. 1st Grid, 2nd Battery: Grid will provide power to the load at first. If grid is not available, battery power will provide power backup.
2. 1st Battery, 2nd Grid: Battery power will provide power to the load at first. If battery power is running out, grid will back up the load.

**NOTE:** This option will become ineffective during AC charging time and the priority will automatically become 1st Grid and 2nd Battery order. Otherwise, it will cause battery damage.

# 14. Operation

## 14-1. Interface

The operation LCD panel, shown in the chart below, includes four touchable function keys and a LCD display to indicate the operating status and input/output power information.

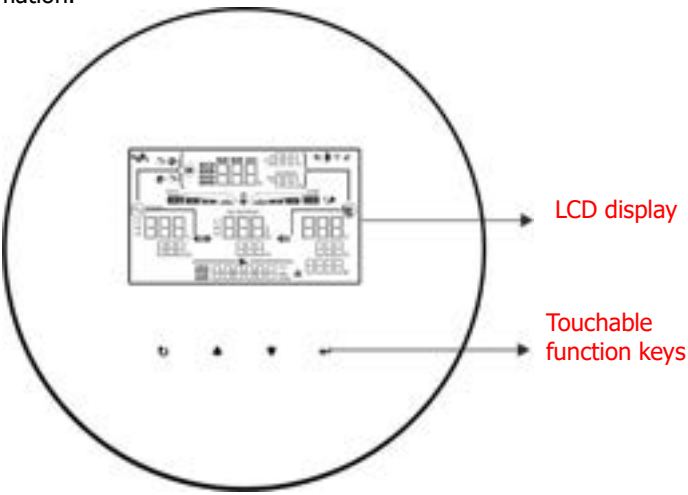


**NOTICE:** To accurately monitor and calculate the energy generation, please calibrate the timer of this unit via software every one month. For the detailed calibration, please check the user manual of bundled software.

## 14-2. LCD Information Define

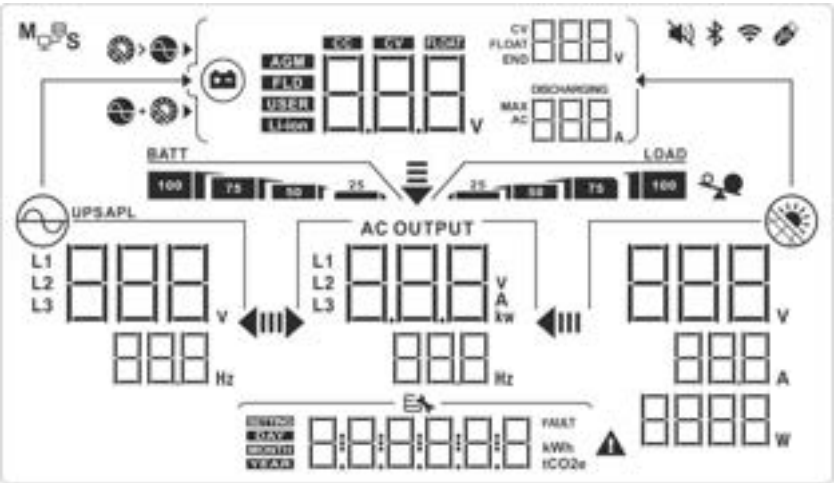

| Display | Function |
|---|---|
| | Indicates AC input voltage and frequency.<br>V: voltage, Hz: frequency, L1/L2/L3: Line phase |
| | Indicates AC output power, voltage, frequency, or current.<br>kw: active power, V: voltage, Hz: frequency, A: current<br>L1/L2/L3: AC output phase |
| | Indicates PV input voltage, power or current.<br>V: voltage, W: power, P1: PV input 1, P2: PV input 2<br>A: current |
| | Allow AC and PV charging |
| | Only PV charging is allowed |
| | Indicates battery voltage, battery current, charging status or battery parameters<br>V: voltage, A: current, Li-ion: Lithium-ion battery type |
| | Indicates battery level in battery mode. |
| | Indicates the warning and fault codes. |
| | Indicates date and time or the date and time users set for querying energy generation. |
| | Indicates solar panels.<br>Icon flashing indicates PV input voltage is out of range. |
| | Indicates utility.<br>Icon flashing indicates utility voltage or frequency is out of range. |
| | Indicates battery condition. And the lattice of the icon indicates battery capacity. |
| | Icon flashing indicates battery is not allowed to discharge. |
| | Icon flashing indicates the battery voltage is too low. |

| | |
|---|---|
| LOAD 25 50 75 100 | Indicates AC output for loads is enabled and inverter is providing power to the connected loads. |
| AC OUTPUT | Indicates AC output for loads is enabled but there is no power provided from inverter. At this time, no battery and the utility are available. Only PV power exists but is not able to provide power to the connected loads. |
| | Indicates overload. |
| M S | Indicates parallel operation is working. |

**14-3. Touchable function keys**

| Function Key | | Operation | Function |
|---|---|---|---|
| | Enter/ON | Quick touch. | Enter query menu. |
| | | | If it's in query menu, touch this button to confirm selection or entry. |
| | | Touch and hold the button for 1.5 second. | This inverter is able to provide power to connected loads via AC output connector. |
| | ESC/OFF | Quick touch. | Return to previous menu. |
| | | Touch and hold the button for 1.5 second. | Turn off power to the loads. |
| | Up | Quick touch. | Select last selection or increase value. |
| | Down | Quick touch. | If it's in query menu, press this button to jump to next selection or decrease value. |
| | | | Mute alarm in standby mode or battery mode. |
| + | | Touch and hold these two buttons for 3 seconds. | Enter setting mode. |

**NOTE:** If backlight shuts off, you may activate it by touching any button.

## 14-4. LCD Setting

After touching and holding "UP" and "DOWN" button for 3 seconds, the unit will enter setting mode. Press "UP" or "DOWN" button to select setting programs. And then, press "ENTER" button to confirm the selection or ESC button to exit.

| Program | Description | Selectable option | |
|---|---|---|---|
| 00 | Exit setting mode | Escape<br>00<br>ESC | |
| 01 | Output voltage | 220Vac<br>01<br>220 | 230Vac(default)<br>01<br>230 |
| | | 240Vac<br>01<br>240 | |
| 02 | Output frequency | 50Hz(default)<br>02<br>F50 | 60Hz<br>02<br>F60 |
| 03 | Battery type | User-Defined(default)<br>03<br>USE | If "User Defined" is selected, battery charge voltage and low DC cut off voltage can be set up in program 4, 7, 8 and 9. |
| | | Pylontech battery<br>03<br>PYL | If selected, programs of 4, 7, 8 and 9 will be automatically set up. No need for further setting. |
| | | WECO battery<br>03<br>uEC | If selected, programs of 4, 7, 8 and9 will be auto-configured per battery supplier recommended. No need for further adjustment. |
| | | Soltaro battery<br>03<br>SOL | If selected, programs of 4, 7, 8and 9 will be automatically set up. No need for further setting. |

| | | | |
|---|---|---|---|
| | | LIb-protocol compatible battery<br>03<br>L Ib | Select "LIb" if using Lithium battery compatible to Lib protocol. If selected, programs of4, 7, 8and 9 will be automatically set up. No need for further setting. |
| | | $3^{rd}$party Lithium battery<br>03<br>L IC | If selected, programs of 4, 7, 8 and 9 will be automatically set up. No need for further setting. Please contact the battery supplier for installation procedure. |
| | | VSC<br>03<br>VSC | If selected, standard CAN protocol will be supported. |
| 04 | Maximum charging current:<br>To configure total charging current for solar and utility chargers.<br>(Max. charging current = utility charging current + solar charging current) | 60A(default)<br>04<br>60 | For 10KW model, setting range is 1A, then from 10A to 200A.<br>For 12KW model, setting range is 1A, then from 10A to 250A.<br>For 15KW model, setting range is 1A, then from 10A to 300A.<br>Increment of each click is 10A. |
| 05 | Maximum utility charging current | 60A(default)<br>05<br>Ut I 60 | For 10KW model, setting range is 1A, then from 10A to 200A.<br>For 12KW model, setting range is 1A, then from 10A to 250A.<br>For 15KW model, setting range is 1A, then from 10A to 300A.<br>Increment of each click is 10A. |

| | | | |
|---|---|---|---|
| 06 | Maximum discharging current | 100A(default) 06 bdC 100 | For 10KW/12KW model, setting range is from 10A to 300A.<br>For 15KW model, setting range is from 10A to 370A.<br>Increment of each click is 10A. |
| 07 | Bulk charging voltage (C.V voltage) | Default setting: 56.0V 07 CV 56.0 | Setting range is from 48.0V to 60.0V. Increment of each click is 0.1V. |
| 08 | Floating charging voltage | Default setting: 54.0V 08 FLV 54.0 | Setting range is from 48.0V to 60.0V. Increment of each click is 0.1V. |
| 09 | Low DC cut off battery voltage setting when grid is available | Default setting:42.0 09 CDV 42.0 | Setting range is from 40V to 60V. Increment of each click is 0.1V. |
| 10 | Battery re-discharging voltage when grid is available. | Default setting:48.0 10 rdV 48.0 | Setting range is form 40V to 60V. Increment of each click is 0.1V |
| 11 | Low DC cut off battery voltage when grid is unavailable. | Default setting:48.0 11 48.0 | Setting range is from 42V to 60V voltage. Increment of each click is 0.1V |
| 12 | Battery re-discharging voltage when grid is unavailable | Default setting:54.0 12 54.0 | Setting range is from 42V to 60V voltage. Increment of each click is 0.1V |
| 13 | Operation Mode | Grid-tie with backup 13 Hbd | PV power can feed-in back to grid, provide power to the load and charge battery. |
| | | Off-Grid 13 OFG | PV power only provides power to the load and charge battery. No feed-in back to grid is allowed. |

| | | | |
|---|---|---|---|
| 13 | Operation Mode | Grid-Tie<br>13<br>Gt 1 | PV power only can feed-in back to grid. |
| 14 | PV energy supply priority setting | Grid-tie with backup Mode | |
| | | Grid-tie with backup I<br>14<br>Hbd 1 | Battery-Load-Grid:<br>PV power will charge battery first, then provide power to the load. If there is any remaining power left, it will feed-in to the grid. |
| | | Grid-tie with backup II<br>14<br>Hbd2 | Load-Battery-Grid:<br>PV power will provide power to the load first. Then, it will charge battery. If there is any remaining power left, it will feed-in to the grid. |
| | | Grid-tie with backup III<br>14<br>Hbd3 | Load-Grid-Battery:<br>PV power will provide power to the load first. If there is more PV power available, it will feed-in to the grid. If feed-in power reaches max. feed-in power setting, the remaining power will charge battery. |
| | | Grid-tie with backup IV<br>14<br>Hbd4 | If selected, it is only allowed to set up peak time and off-peak for electricity demand. Programs of 15, 17, 18, 19 and 20 can't be set and only programs of 21, 22, 23 and 24 can be set. |
| | | Off-Grid Mode | |
| | | Off-Grid I<br>14<br>OFG 1 | Load-Battery:<br>PV power will provide power to the load first and then charge battery. Feed-in to the grid is not allowed under this mode. At the same time, the grid relay is |

| | | | |
|---|---|---|---|
| 14 | PV energy supply priority setting | Off-Grid II<br> | Battery-Load:<br>PV power will charge battery first. After battery is fully charged, if there is remaining PV power left, it will provide power to the load. Feed-in to the grid is not allowed under this mode. At the same time, the grid relay is connected. |
| | | Off-Grid III<br> | Load-Battery:<br>PV power will provide power to load first and then charge battery. Feed-in to the grid is not allowed under this mode. The grid relay is NOT connected. |
| | | Grid-Tie Mode | |
| | | 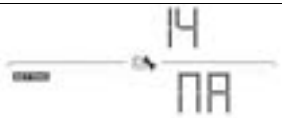 | PV power only feeds-in to the grid. No priority setting is available. |
| 15 | Charger source priority | Solar and Utility(default)<br> 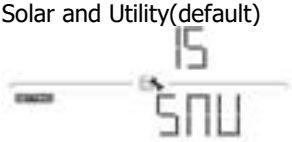 | If there is remaining PV power after supporting the loads, it will charge battery first. Only until PV power is not available, grid will charge battery. |
| | | Only Solar<br> | It is only allow PV power to charge battery. |
| | | None<br> | It is not allowed to charge battery no matter it's PV power or grid. |
| 16 | Feed to grid function | Feed to grid disable (default)<br> 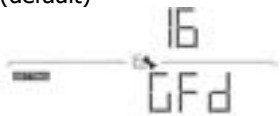 | Feed to grid enable<br> 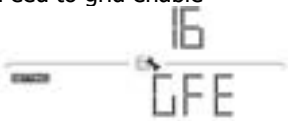 |

| | | | |
|---|---|---|---|
| 17 | Battery energy feed to grid function when PV energy is available | Battery feed to grid disable (default)<br>17<br>bFGd | Battery feed to grid enable<br>17<br>bFGE |
| 18 | Battery energy feed to grid function when PV energy is unavailable. | Battery feed to grid disable (default)<br>18<br>bFGd | Feed to grid enable<br>18<br>bFGE |
| 19 | Load supply source (PV is available) | SUB(default)<br>19<br>SUb | Solar-grid-battery:<br>PV power will provide power to the load first. If it's not sufficient, grid will provide power to the load. If grid is not available at the same time, battery power will back up. |
| | | SBU<br>19<br>SbU | Solar-Battery-Grid:<br>PV power will provide power to the load first. If it's not sufficient, battery power will provide power to the load. When battery power is running out or not available, grid will back up the load. |
| 20 | Load supply source (PV is unavailable) | UB(default)<br>20<br>Ub | Grid-Battery:<br>Grid will provide power to the load at first. If grid is not available, battery power will provide power backup. |
| | | BU<br>20<br>bU | Battery-Grid:<br>Battery power will provide power to the load at first. If battery power is running out, grid will back up the load. This setting is ineffective during of AC charging. |
| 21 | Start charging time for first duration of AC charge | 00:00 (Default)<br>21<br>StA00.0 | The setting range of start charging time for AC charger is from 00:00 to 23:00. Increment of each click is 1 hour. |

| | | | |
|---|---|---|---|
| 22 | Stop charging time for first duration of AC charge | 00:00 (Default) | The setting range of stop charging time for AC charger is from 00:00 to 23:00. Increment of each click is 1 hour. |
| 23 | Start charging time for second duration of AC charge | 00:00 (Default) | The setting range of start charging time for AC charger is from 00:00 to 23:00. Increment of each click is 1 hour. |
| 24 | Stop charging time for second duration of AC charge | 00:00 (Default) | The setting range of start charging time for AC charger is from 00:00 to 23:00. Increment of each click is 1 hour. |
| 25 | Scheduled time for AC output on | 00:00 (Default) | The setting range of AC output on is from 00:00 to 23:00. Increment of each click is 1 hour. |
| 26 | Scheduled time for AC output off | 00:00 (Default) | The setting range of AC output off is from 00:00 to 23:00. Increment of each click is 1 hour. |
| 27 | LCD off waiting time | LCD is always on | The LCD turns off after 30s |
| | | The LCD turns off after 60s(default) | The LCD turns off after 300s. |
| | | The LCD turns off after 600s | |
| 28 | Alarm control | Alarm on(default) | Alarm off |

| | | | |
|---|---|---|---|
| 29 | Alarm control at standby mode | Alarm on in standby mode(default) | Alarm off in standby mode |
| 30 | Alarm control at battery mode | Alarm on in battery mode (default) | Alarm off in battery mode |
| 31 | Activate lithium battery when the device is powered on | Activate lithium battery enable(default) | Activate lithium battery disable |
| 32 | AC output mode | Single: This inverter is used in single phase application (default) | Parallel: This inverter is operated in parallel system. |
| 33 | Generator as AC source | Disable(default) | Enable |
| 34 | Wide AC input range | Disable(default) | Enable |
| 35 | N/G relay close in battery mode | Disable (default) | Enable |
| 39 | Time setting – Minute | | For minute setting, the range is from 00 to 59. |

| | | | |
|---|---|---|---|
| 40 | Time setting – Hour | 40 HOU 00 | For hour setting, the range is from 00 to 23. |
| 41 | Time setting– Day | 41 dAt 01 | For day setting, the range is from 00 to 31. |
| 42 | Time setting– Month | 42 mON 01 | For month setting, the range is from 01 to 12. |
| 43 | Time setting – Year | 43 YEA 21 | For year setting, the range is from 17 to 99. |

## 14-5. LCD Display Information

There are two ways to change LCD display information: Query menu and pressing " ▲ " or " ▼ " to switch displayed information.

### Query Menu Operation

The display shows current contents that have been set. The displayed contents can be changed in query menu via button operation. Press 'Enter' button to enter query menu. There are seven query selections:

- Input voltage or frequency of AC input.
- Frequency, voltage or power of AC output.
- Input voltage or power of PV input.

### Setting Display Procedure

- **Input voltage or frequency of AC input**

**Procedure**

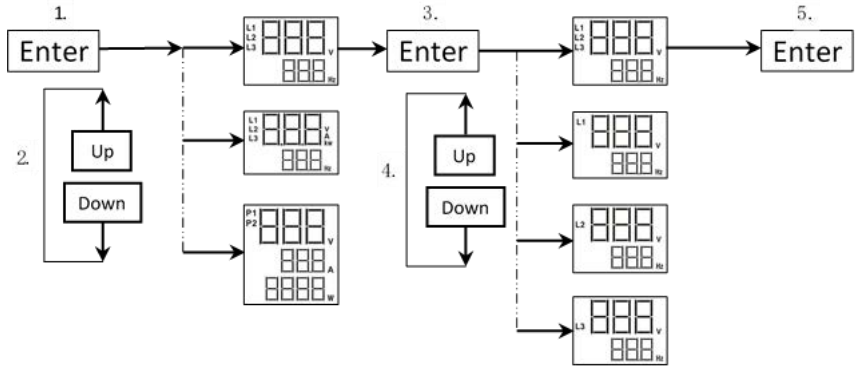

- **Frequency, voltage or power of AC output**

**Procedure**

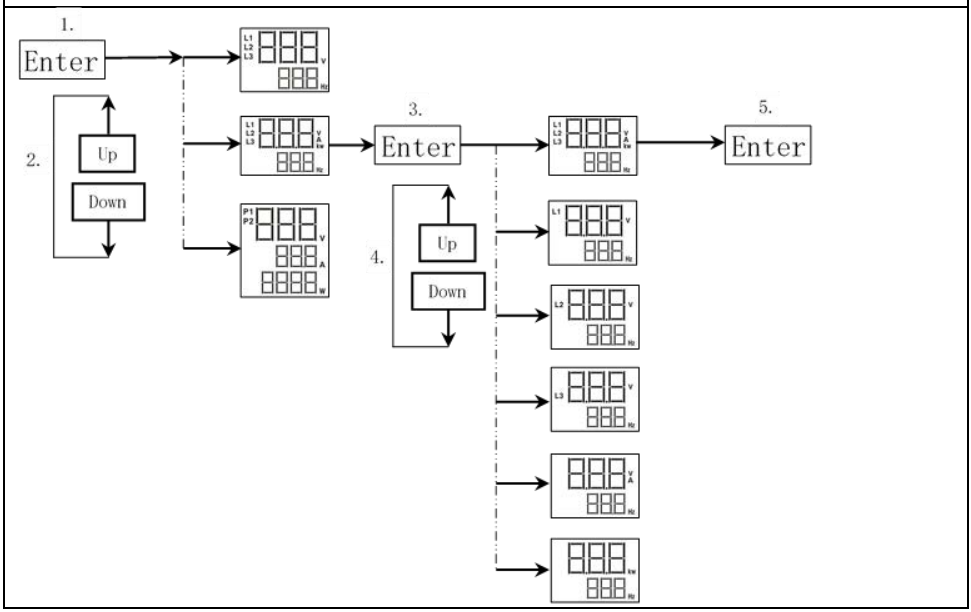


- **Input voltage or power of PV input.**

**Procedure**

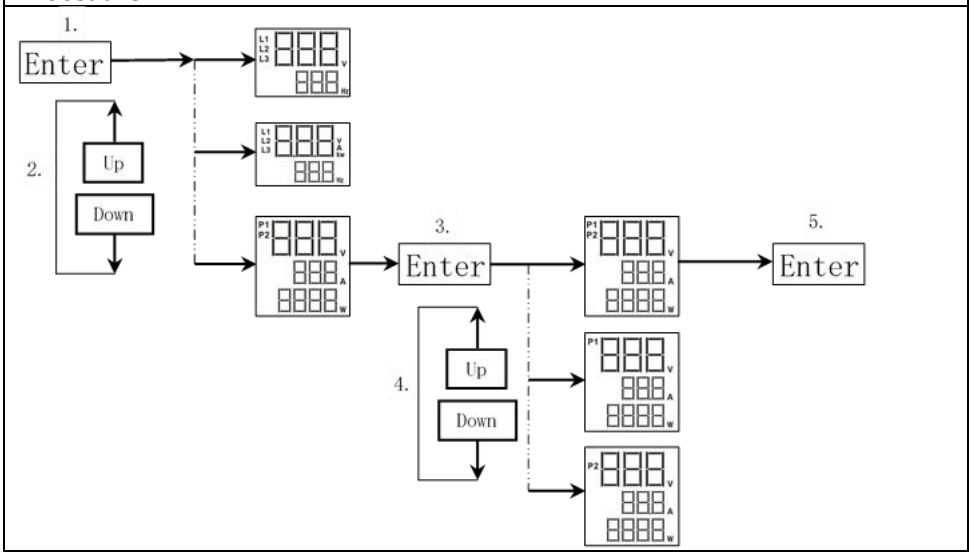

## Switch LCD Displayed Information

The LCD display information will be switched in turns by pressing " ▲ " or " ▼ " key. The selectable information is switched as the following table in order.

| Selectable information | LCD display |
|---|---|
| Real date | Real date：2020-08-18 |
| Real time | Real time：10:08 |
| PV energy generated today | PV energy generated today =8Wh. |

| | |
|---|---|
| PV energy generated this month | PV energy generated this month = 8kWh. 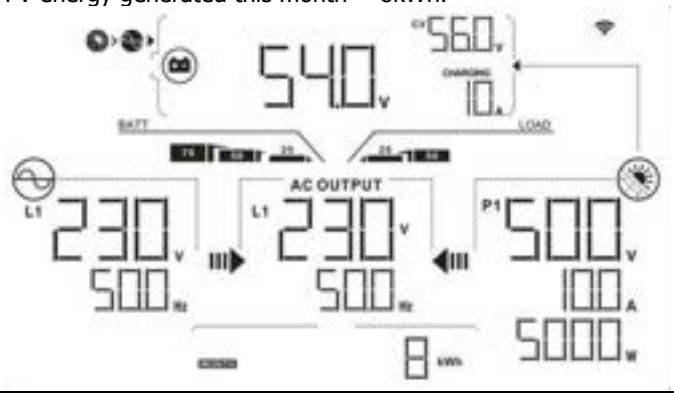  |
| PV energy generated this year | PV energy generated this year = 108kWh 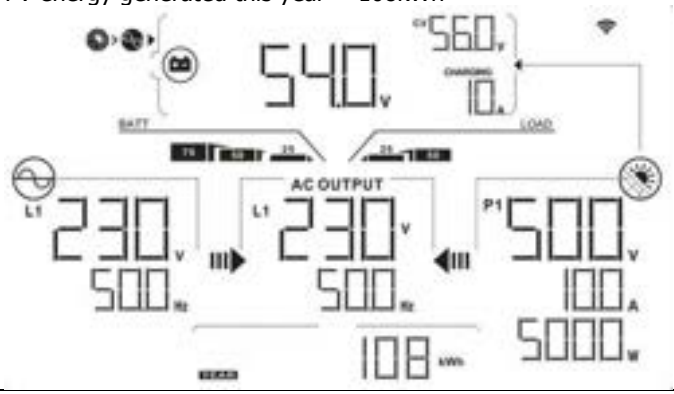  |
| Total PV energy generated | Total PV energy generated = 108kWh. 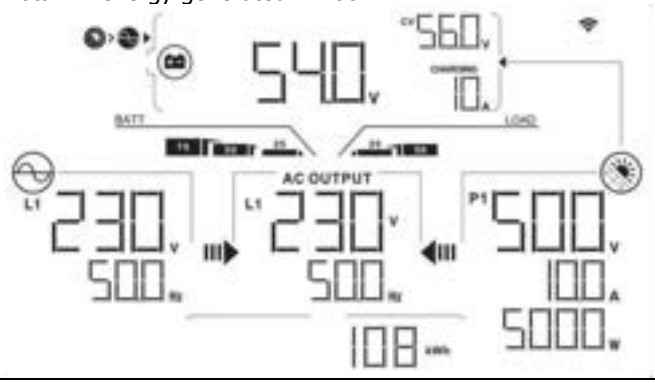  |

| | |
|---|---|
| Main CPU version checking. | Main CPU version 01.01. 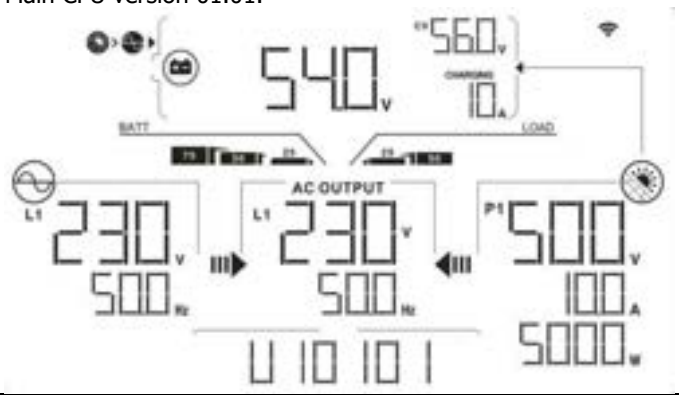  |
| Secondary CPU version checking | Secondary CPU version 01.01. |
| Remote version checking | Remote version 16.00 |

| | |
|---|---|
| Warning code | Warning code：08 |

**14-6. Operation Mode & Display**

Below is only contained LCD display for **grid-tie with backup mode (I)**. If you need to know other operation mode with LCD display, please check with installer.

**Inverter mode with grid connected**

This inverter is connected to grid and working with DC/INV operation.

| LCD Display | Description |
|---|---|
| 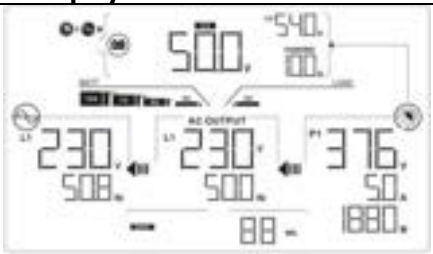 | PV power is sufficient to charge battery, provide power to loads, and then feed in to the grid. |
| 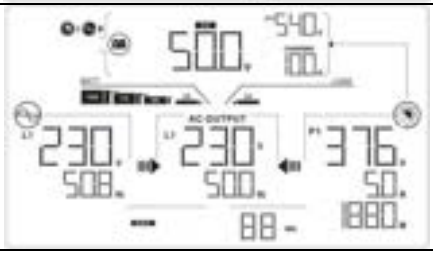 | PV power is sufficient to charge the battery first. However, remaining PV power is not sufficient to back up the load. Therefore, remaining PV power and the utility are supplying power to the connected load. |

| | |
|---|---|
| 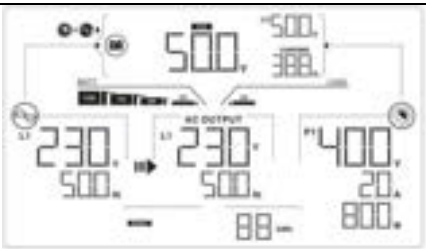 | PV power is generated, but not sufficient enough to charge battery by itself. PV power and the utility are charging battery at the same time. And the utility is also supplying power to the connected load. |
| 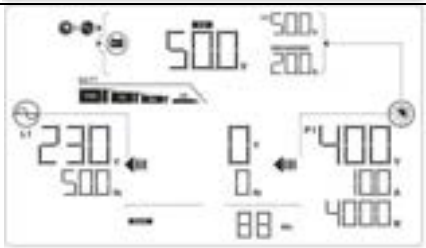 | This inverter is disabled to generate power to the loads via AC output. PV power is sufficient to charge battery first. Remaining PV power will feed in back to grid. |
| 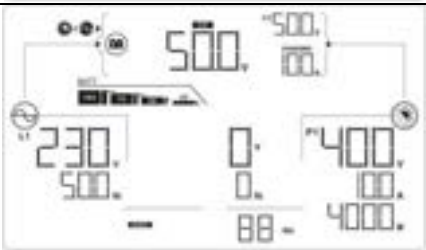 | This inverter is disabled to generate power to the loads via AC output. PV power and utility are charging battery at the same time because of insufficient PV power. |
| 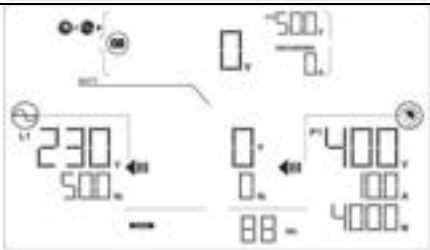 | This inverter is disabled to generate power to the loads via AC output. PV power is feeding power back to the grid. |
| 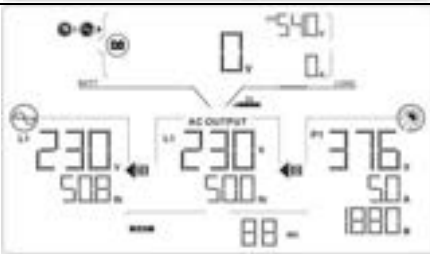 | PV power is sufficient to provide power to loads and feed power back to the grid. |

| | |
|---|---|
| 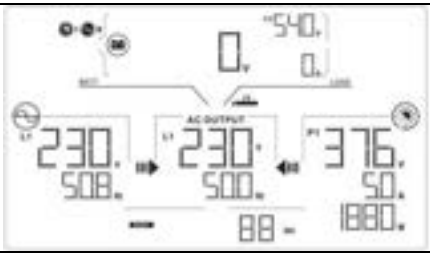 | PV power and utility are providing power to the connected loads because of insufficient PV power. |

**Inverter mode without grid connected**

This inverter is working with DC/INV operation and not connecting to the grid.

| LCD Display | Description |
|---|---|
| 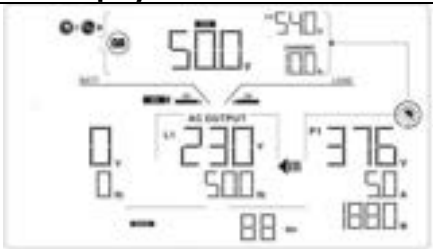 | PV power is sufficient to charge battery and provide power to the connected loads. |
| | PV power is generated, but not sufficient to power loads by itself. PV power and battery are providing power to the connected loads at the same time. |
| | Only battery power is available to provide power to connected loads. |

**Bypass mode**

The inverter is working without DC/INV operation and connecting to the loads.

| LCD Display | Description |
|---|---|
| 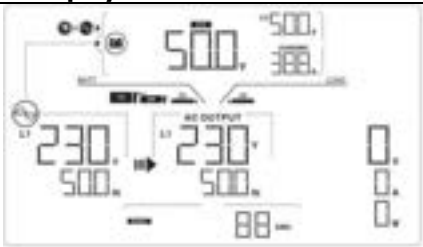 | Only utility is charging battery and providing power to connected loads. |
| 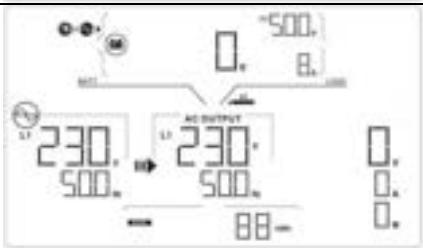 | Only utility is available to provide power to connected loads. |

**Standby mode :**

The inverter is working without DC/INV operation and load connected.

| LCD Display | Description |
|---|---|
| 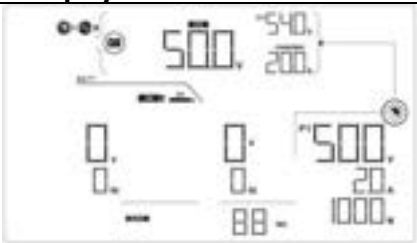 | This inverter is disabled on AC output or even AC power output is enabled, but an error occurs on AC output. Only PV power is sufficient to charge battery. |
| 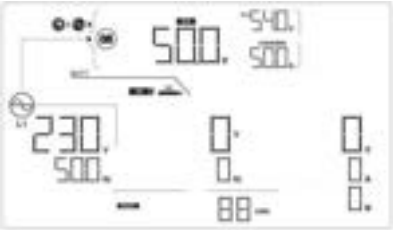 | This inverter is disabled to generate power to the loads via AC output. PV power is not detected or available at this moment. Only utility is available to charge battery. |

| | |
|---|---|
| 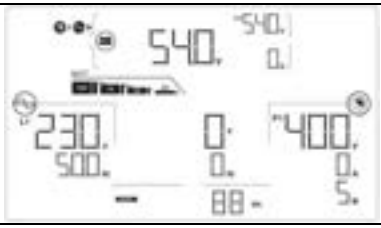 | If PV, battery or utility icons are flashing, it means they are not within acceptable working range. If they are not displayed, it means they are not detected. |

# 15. Charging Management

| Charging Parameter | Default Value | Note |
|---|---|---|
| Charging current | 60A | For 12KW model, it can be adjusted via software from 10Amp to 250Amp.<br>For 15KW model, it can be adjusted via software from 10Amp to 300Amp. |
| Floating charging voltage (default) | 54.0 Vdc | It can be adjusted via software from 50Vac to 60Vdc. |
| Max. absorption charging voltage (default) | 56.0 Vdc | It can be adjusted via software from 50Vac to 60Vdc. |
| Battery overcharge protection | 62.0 Vdc | |
| Charging process based on default setting.<br>3 stages:<br>First – max. charging voltage increases to 56V;<br>Second- charging voltage will maintain at 56V until charging current is down to 12 Amp;<br>Third- go to floating charging at 54V. | 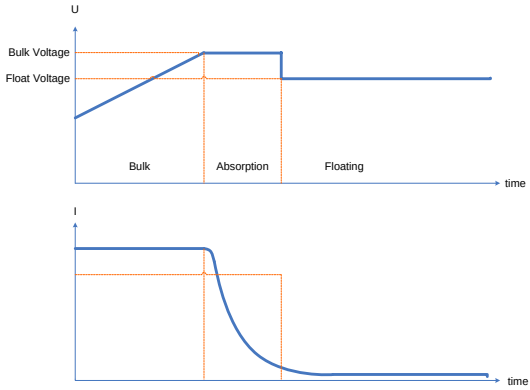 | |

This inverter can connect to battery types of sealed lead acid battery, vented battery, gel battery and lithium battery. The detail installation and maintenance explanations of the external battery pack are provided in the manufacturer's external battery pack of manual.

If using sealed lead acid battery, please set up the max. charging current according to below formula:

The maximum charging current = Battery capacity (Ah) x 0.2

For example, if you are using 300 Ah battery, then, maximum charging current is 300 x 0.2=60 (A). Please use at least 50Ah battery because the settable minimum value of charging current is 10A. If using AGM/Gel or other types of battery, please consult with installer for the details.

Below is setting screen from software:

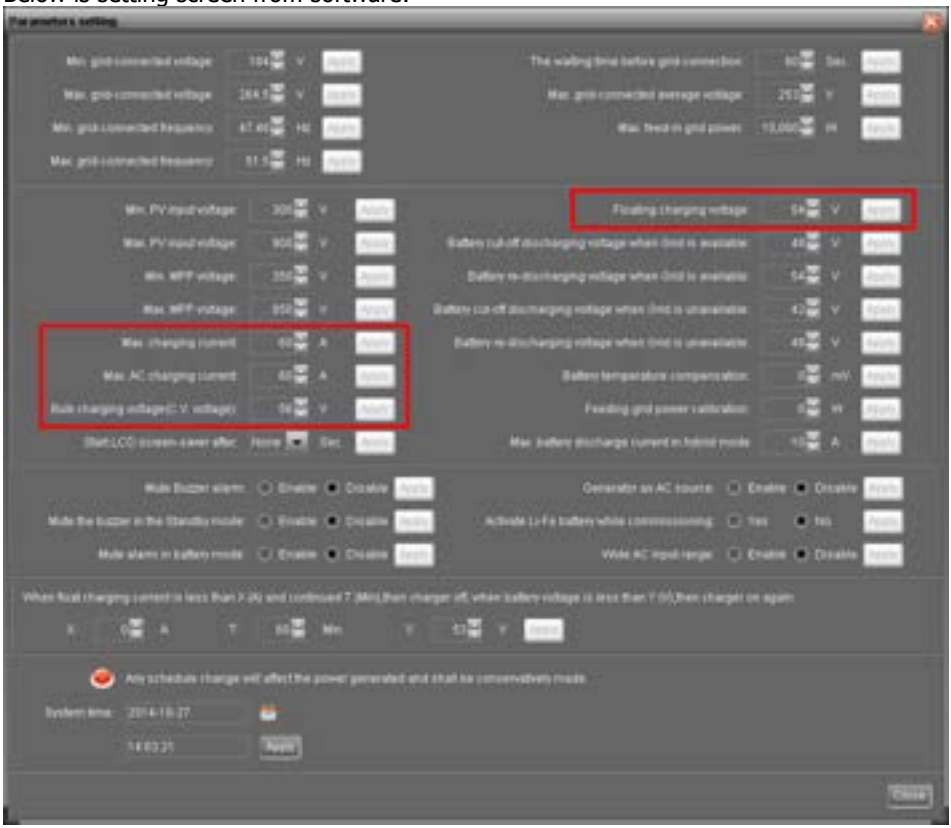

# 16. Maintenance & Cleaning

Check the following points to ensure proper operation of whole solar system at regular intervals.

- Ensure all connectors of this inverter are cleaned all the time.
- Before cleaning the solar panels, be sure to turn off PV DC breakers.
- Clean the solar panels, during the cool time of the day, whenever it is visibly dirty.
- Periodically inspect the system to make sure that all wires and supports are securely fastened in place.

**WARNING**: There are no user-replaceable parts inside of the inverter. Do not attempt to service the unit yourself.

## Battery Maintenance

- Servicing of batteries should be performed or supervised by personnel knowledgeable about batteries and the required precautions.
- When replacing batteries, replace with the same type and number of batteries or battery packs.
- The following precautions should be observed when working on batteries:
  a) Remove watches, rings, or other metal objects.
  b) Use tools with insulated handles.
  c) Wear rubber gloves and boots.
  d) Do not lay tools or metal parts on top of batteries.
  e) Disconnect charging source prior to connecting or disconnecting battery terminals.
  f) Determine if battery is inadvertently grounded. If inadvertently grounded, remove source from ground. Contact with any part of a grounded battery can result in electrical shock. The likelihood of such shock can be reduced if such grounds are removed during installation and maintenance (applicable to equipment and remote battery supplies not having a grounded supply circuit).

**CAUTION**: A battery can present a risk of electrical shock and high short-circuit current.
**CAUTION**: Do not dispose of batteries in a fire. The batteries may explode.
**CAUTION**: Do not open or mutilate batteries. Released electrolyte is harmful to the skin and eyes. It may be toxic.

# 17. Trouble Shooting

When there is no information displayed in the LCD, please check if PV module/battery/grid connection is correctly connected.

**NOTE:** The warning and fault information can be recorded by remote monitoring software.

### 17-1. Warning List

There are 20 situations defined as warnings. When a warning situation occurs, ⚠ icon will flash and 888 will display warning code. If there are several codes, it will display in sequences. Please contact your installer when you couldn't handle with the warning situations.

| Code | Warning Event | Icon (flashing) | Description |
|---|---|---|---|
| 01 | Line voltage high loss | ⚠ | Grid voltage is too high. |
| 02 | Line voltage low loss | ⚠ | Grid voltage is too low. |
| 03 | Line frequency high loss | ⚠ | Grid frequency is too high. |
| 04 | Line frequency low loss | ⚠ | Grid frequency is too low. |
| 05 | Line voltage loss for long time | ⚠ | Grid voltage is higher than 253V. |
| 06 | Ground Loss | ⚠ | Ground wire is not detected. |
| 07 | Island detect | ⚠ | Island operation is detected. |
| 08 | Line waveform loss | ⚠ | The waveform of grid is not suitable for inverter. |
| 09 | Line phase loss | ⚠ | The phase of grid is not in right sequence. |
| 10 | EPO detected | ⚠ | EPO is open. |
| 11 | Overload | ⚠ | Load exceeds rating value. |
| 12 | Over temperature | ⚠ | The temperature is too high inside. |
| 13 | Batter voltage low | ⚠ | Battery discharges to low alarm point. |
| 14 | Battery under-voltage when grid is loss | ⚠ | Battery discharges to shutdown point. |
| 15 | Battery open | ⚠ | Battery is unconnected or too low. |
| 16 | Battery under-voltage when grid is OK | ⚠ | Battery stops discharging when the grid is OK. |
| 17 | Solar over voltage | ⚠ | PV voltage is too high. |
| b1 | Stop discharging battery | ⚠ | Informs inverter to stop discharging battery. |
| b2 | Stop charging battery | ⚠ | Informs inverter to stop charging battery |
| b3 | Charge battery | ⚠ | Informs inverter to charge battery. |

### 17-2. Fault Reference Codes

When a fault occurs, the icon FAULT will flash as a reminder. See below for fault codes for reference.

| Situation | | | Solution |
|---|---|---|---|
| **Fault Code** | **Fault Event** | **Possible cause** | |
| 01 | Bus voltage over | Surge | 1. Restart the inverter.<br>2. If the error message still remains, please contact your installer. |
| 02 | BUS voltage under | PV or battery disconnect suddenly | 1. Restart the inverter<br>2. If the error message still remains, please contact your installer. |
| 03 | BUS soft start time out | Internal components failed. | Please contact your installer. |
| 04 | INV soft start time out | Internal components failed. | Please contact your installer. |
| 05 | INV over current | Surge | 1. Restart the inverter.<br>2. If the error message still remains, please contact your installer. |
| 06 | Over temperature | Internal temperature is too high. | 1. Check the ambient temperature and fans.<br>2. If the error message still remains, please contact your installer. |
| 07 | Relay fault | Internal components failed. | Please contact your installer. |
| 08 | CT sensor fault | Internal components failed. | Please contact your installer. |
| 09 | Solar input power abnormal | 1. Solar input driver damaged.<br>2. Solar input power is too much when voltage is more than 850V. | 1. Please check if solar input voltage is higher than 850V.<br>2. Please contact your installer. |
| 11 | Solar over current | Surge | 1. Restart the inverter.<br>2. If the error message still remains, please contact your installer. |

| | | | |
|---|---|---|---|
| 12 | GFCI fault | Leakage current excceds the limit. | 1. Check the wire and panels which may cause the leakage.<br>2. If the error message still remains, please contact your installer. |
| 13 | PV ISO fault | The resistance between PV and ground is too low. | |
| 14 | INV DC current over | Utility fluctuates. | 1. Restart the inverter.<br>2. If the error message still remains, please contact your installer. |
| 16 | GFCI sensor fault | GFCI sensor failed. | Please contact your installer. |
| 22 | Battery high voltage fault | Battery voltage exceeds the limit. | 1. Check the battery voltage.<br>2. If the error message still remains, please contact your installer. |
| 23 | Overload | The inverter is loaded with more than 110% load and time is up. | Reduced the connected load by switching off some equipment. |
| 26 | INV short | Output short circuited. | Check if wiring is connected well and remove abnormal load. |
| 27 | Fan lock | Fan failed. | Please contact your installer. |
| 32 | DC/DC over current | Internal components failed. | 1. Restart the inverter.<br>2. If the error message still remains, please contact your installer. |
| 33 | INV voltage low | Internal components failed. | Please contact your installer. |
| 34 | INV voltage high | Internal components failed. | Please contact your installer. |
| 36 | OP voltage fault | Grid connects to output terminal. | Don’t connect the grid to the ouput terminal. |
| 38 | Short circuit on PV input | Short circuited on PV input | Please contact your installer. |
| 46 | RS inverter short circuit | Short circuited on RS inverter | Check if all wiring is connected well and remove abnormal loads. |
| 47 | ST inverter short circuit | Short circuited on ST inverter | Check if all wiring is connected well and remove abnormal loads. |
| 48 | TR inverter short circuit | Short circuited on TR inverter | Check if all wiring is connected well and remove abnormal loads. |

| | | | |
|---|---|---|---|
| 49 | BUCK BOOST is over temperature | BUCK BOOST temperature is too high. | 1. Check the ambient temperature and fans.<br>2. If the error message still remains, please contact your installer. |
| 50 | Relay version error | Internal components failed. | Please contact your installer. |
| 52 | PV1 Over temperature | PV1 temperature is too high. | 1. Check the ambient temperature and fans.<br>2. If the error message still remains, please contact your installer. |
| 53 | DC/DC board of internal battery is over temperature | The temperature of DC/DC board in internal battery is too high. | 1. Check the ambient temperature and fans.<br>2. If the error message still remains, please contact your installer. |
| 54 | Inverter over temperature | Inverter temperature is too high. | 1. Check the ambient temperature and fans.<br>2. If the error message still remains, please contact your installer. |
| 56 | DCDC is over temperature | DCDC temperature is too high. | 1. Check the ambient temperature and fans.<br>2. If the error message still remains, please contact your installer. |
| 57 | Control board is over temperature | Control panel temperature is too high. | 1. Check the ambient temperature and fans.<br>2. If the error message still remains, please contact your installer. |
| 58 | External battery is over temperature | The temperature of external battery is too high. | 1. Check the ambient temperature and fans.<br>2. If the error message still remains, please contact your installer. |
| 59 | DC/DC board of battery is over temperature. | The temperature of DC/DC board in battery is too high. | 1. Check the ambient temperature and fans.<br>2. If the error message still remains, please contact your installer. |

# 18. Specifications

| MODEL | 10KW | 12KW | 15KW |
|---|---|---|---|
| **RATED POWER** | 10000 W | 12000 W | 15000 W |
| **PV INPUT (DC)** | | | |
| Maximum DC Power | 14500 W | 16000 W | 22500 W |
| Nominal DC Voltage | 720 VDC | | |
| Maximum DC Voltage | 1000 VDC | | |
| Working DC Voltage Range | 300 VDC ~ 1000 VDC | | |
| Start-up Voltage / Initial Feeding Voltage | 320 VDC / 350 VDC | | |
| MPP Voltage Range / Full Load MPP Voltage Range | 350 VDC ~ 950 VDC / 348 VDC ~ 900 VDC | | |
| Maximum Input Current | 27A + 27A | | |
| Isc PV (absolute maximum) | 30 A | | |
| Max. inverter back feed current to the array | 0 A | | |
| **GRID OUTPUT (AC)** | | | |
| Nominal Output Voltage | 230 VAC (P-N) / 400 VAC (P-P) | | |
| Output Voltage Range | 184 - 265 VAC per phase | | |
| Output Frequency Range | 47.5 ~ 51.5 Hz or 59.3~ 60.5Hz | | |
| Nominal Output Current | 14.5A per phase | 17.4A per phase | 21.7A per phase |
| Inrush Current/Duration | 22 A per phase / 20ms | | |
| Maximum Output Fault Current/Duration | 66 A per phase / 1ms | | |
| Maximum output Overcurrent Protection | 66 A per phase | | |
| Power Factor Range | 0.9 lead – 0.9 lag | | |
| **AC INPUT** | | | |
| AC Start-up Voltage | 120-140 VAC per phase | | |
| Auto Restart Voltage | 180 VAC per phase | | |
| Acceptable Input Voltage Range | 170 - 290 VAC per phase | | |
| Nominal Frequency | 50 Hz / 60 Hz | | |
| AC Input Power | 10KVA/10KW | 12KVA/12KW | 15KVA/15KW |
| Maximum AC Input Current | 40 A | | |
| Inrush Input Current | 40 A / 1ms | | |
| **BATTERY MODE OUTPUT (AC)** | | | |
| Nominal Output Voltage | 230 VAC (P-N) / 400 VAC (P-P) | | |
| Output Frequency | 50 Hz / 60 Hz (auto sensing) | | |
| Output Waveform | Pure sine wave | | |
| Output Power | 10KVA/10KW | 12KVA/12KW | 15KVA/15KW |
| Efficiency (DC to AC) | 91% | | |
| **BATTERY & CHARGER (Lead-acid/Li-ion)** | | | |
| DC Voltage Range | 40 – 62 VDC | | |
| Nominal DC Voltage | 48 VDC | | |
| Maximum Battery Discharging Current | 250 A | 300 A | 375 A |
| Maximum Charging Current | 200 A | 250 A | 300 A |
| **GENERAL** | | | |
| **PHYSICAL** | | | |
| Dimension, D X W X H (mm) | 255 x 660 x 750 | | |
| Net Weight (kgs) | 70 | 70 | 73 |
| **INTERACE** | | | |

| | |
|---|---|
| Communication Port | RS-232/USB/RS485/CAN/WI-FI |
| Intelligent Slot | Optional SNMP, Modbus cards available |
| **ENVIRONMENT** | |
| Protective Class | I |
| Ingress Protection Rating | IP65 |
| Humidity | 0 ~ 100% RH (No condensing) |
| Operating Temperature | -25 to 60°C (Power derating above 45°C) |
| Altitude | Max. 1000m* |

* Power derating 1% every 100m when altitude is over 1000m.

# Appendix I: Parallel Installation Guide

**Introduction**
This inverter can be used in parallel with maximum 6 units.

**Parallel cable**
You will find the following items in the package:

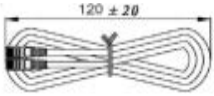


Parallel communication cable

Current sharing cable

**Overview**

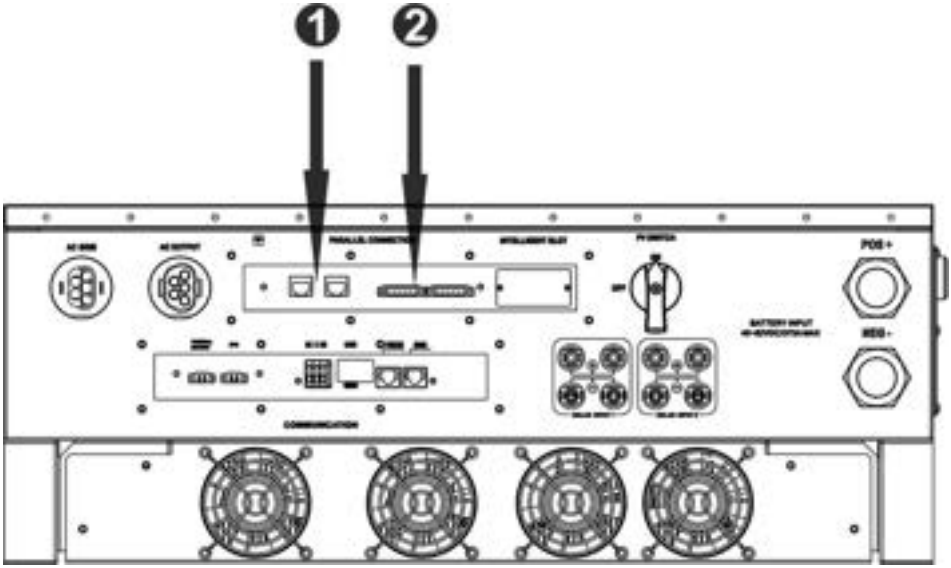


1. Parallel communication port
2. Current sharing port

**Mounting the Unit**

When installing multiple units, please follow below chart.

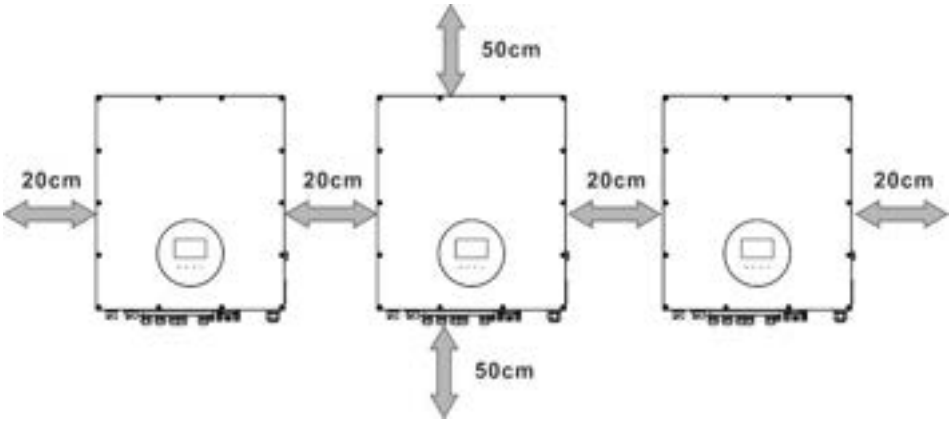


**NOTE:** For proper air circulation to dissipate heat, it's necessary to allow a clearance of approx. 50 cm to the side and approx. 20 cm above and below the unit. Be sure to install each unit in the same level.

**Wiring Connection**

The cable size of each inverter is shown as below:

**Ring terminal:**

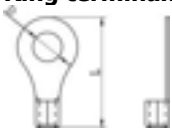

**Recommended battery cable and terminal size for each inverter:**

| Model | Wire Size | Ring Terminal | | | Torque value |
|---|---|---|---|---|---|
| | | Cable $mm^2$ | Dimensions | | |
| | | | D (mm) | L (mm) | |
| 10KW/12KW | 4/0 | 107 | 8.4 | 54.2 | 7~12 Nm |
| 15KW | 300 | 151 | 8.4 | 54.2 | 7~12 Nm |

**WARNING:** Be sure the length of all battery cables is the same. Otherwise, there will be voltage difference between inverter and battery to cause parallel inverters not working.

**Recommended AC input and output cable size for each inverter:**

| Model | AWG no. | Conductor cross-section | Torque |
|---|---|---|---|
| 10KW/12KW/15KW | 10~8 AWG | 5.5~10 $mm^2$ | 1.4~1.6Nm |

You need to connect the cables of each inverter together. Take the battery cables for example. You need to use a connector or bus-bar as a joint to connect the battery cables together, and then connect to the battery terminal. The cable size used from joint to battery should be X times cable size in the tables above. "X" indicates the number of

inverters connected in parallel.
Regarding cable size of AC input and output, please also follow the same principle.

**CAUTION!!** Please install a breaker at the battery side. This will ensure the inverter can be securely disconnected during maintenance and fully protected from overcurrent of battery.

**Recommended breaker specification of battery for each inverter:**

| Model | One unit* |
|---|---|
| 10KW/12KW | 350A/60VDC |
| 15KW | 450A/60VDC |

*If you want to use only one breaker at the battery side for the whole system, the rating of the breaker should be X times current of one unit. "X" indicates the number of inverters connected in parallel.

**Recommended battery capacity**

| Inverter parallel numbers | 2 | 3 | 4 | 5 | 6 |
|---|---|---|---|---|---|
| Battery Capacity | 800AH | 1200AH | 1600AH | 2000AH | 2400AH |

**CAUTION!** Please follow the battery charging current and voltage from battery spec to choose the suitable battery. The wrong charging parameters will reduce the battery lifecycle sharply.

**Approximate back-up time table**

| Load (W) | Backup Time @ 48Vdc 800Ah (min) | Backup Time @ 48Vdc 1200Ah (min) | Backup Time @ 48Vdc 1600Ah (min) | Backup Time @ 48Vdc 2000Ah (min) | Backup Time @ 48Vdc 2400Ah (min) |
|---|---|---|---|---|---|
| 5,000 | 240 | 360 | 480 | 600 | 720 |
| 10,000 | 112 | 168 | 224 | 280 | 336 |
| 15,000 | 60 | 90 | 120 | 150 | 180 |
| 20,000 | 40 | 60 | 80 | 100 | 120 |
| 25,000 | 20 | 30 | 40 | 50 | 60 |
| 30,000 | 16 | 24 | 32 | 40 | 48 |

**PV Connection**

Please refer to user manual of single unit for PV Connection.

**CAUTION:** Each inverter should connect to PV modules separately.

## Inverters Configuration

Two inverters in parallel:

### Power Connection

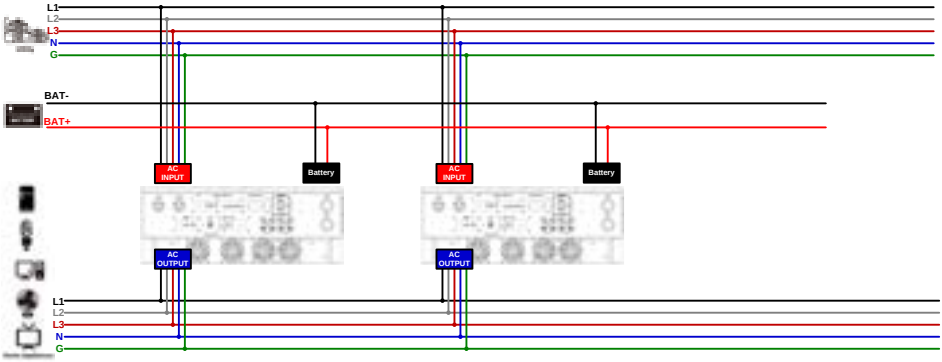


### Communication Connection

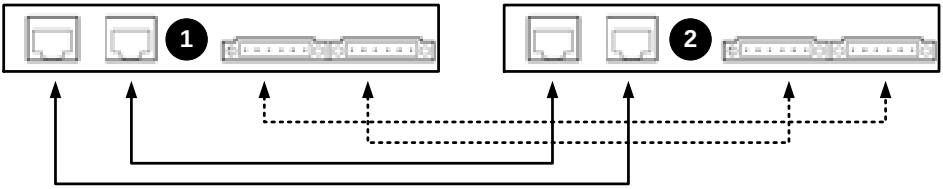


Three inverters in parallel:

### Power Connection

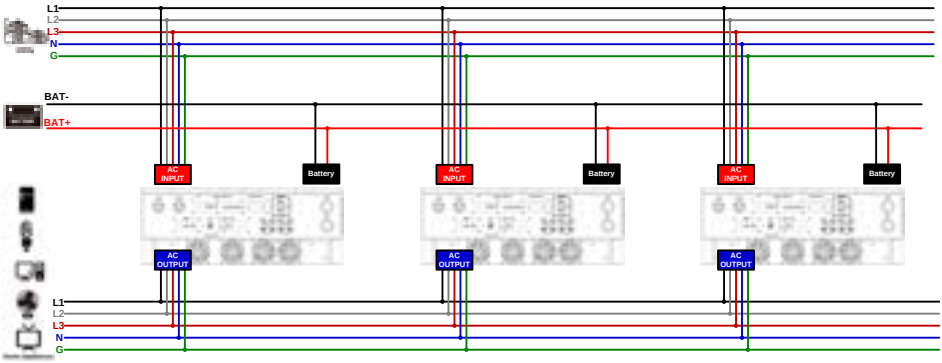


### Communication Connection

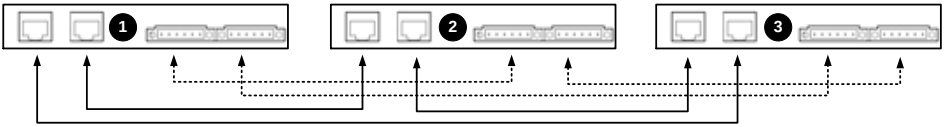

## Four inverters in parallel:

### Power Connection

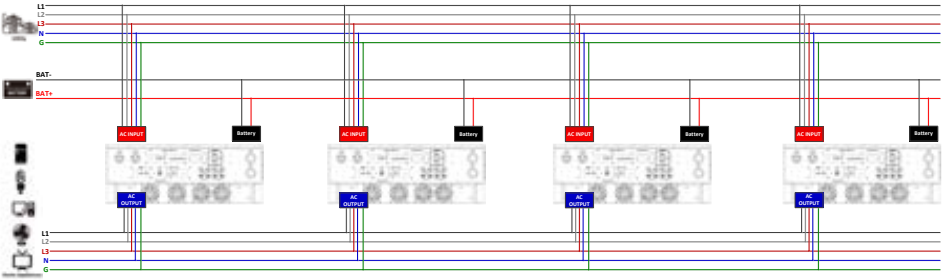


### Communication Connection

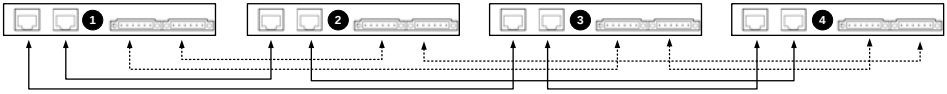


## Five inverters in parallel:

### Power Connection

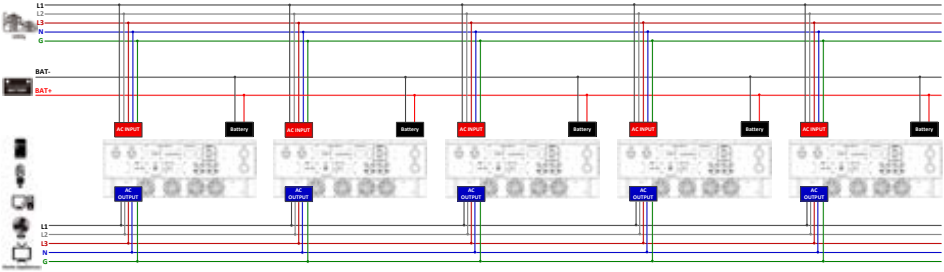


### Communication Connection

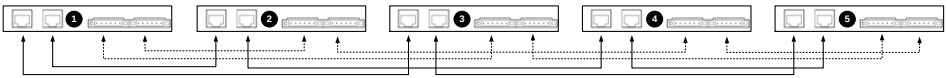

Six inverters in parallel:

## Power Connection

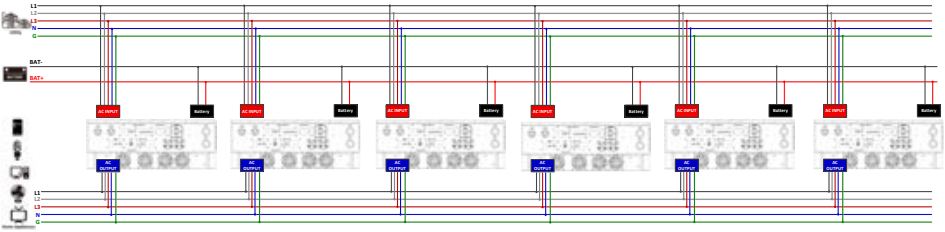


## Communication Connection

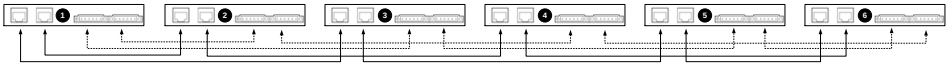

**Setting and LCD Display**
**Setting Program:**

The parallel function setting is only available by SolarPower. Please install SolarPower in your PC first.
For setting, you can set the inverter one by one through RS232 or USB port.
But we suggest to use SNMP or Modbus card to combine the system as a centralized monitoring system. Then, you can use "SYNC" function to set all the inverters at the same time. If using SNMP or Modbus card to set up program, the bundled software is SolarPower Pro.

- Use SNMP card to synchronize the parameters:

Each inverter should be installed one SNMP card. Make sure all of the SNMP cards are connected to the router as a LAN.

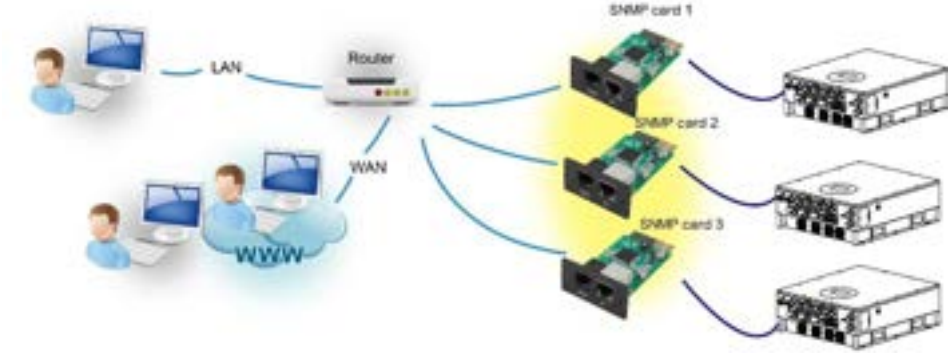


- Use Modbus card to synchronize the parameters:

Each inverter should be installed one Modbus card. Make sure all of the Modbus cards are connected to each other and one of the Modbus cards is connected to the computer by RS-485/RS232 converter.

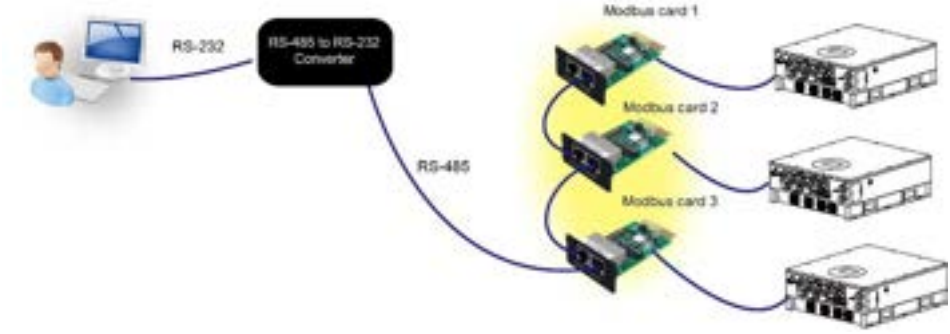


Launch SolarPowerPro in computer and select Device Control >> Parameter Setting >> Parallel output. Two options: Enable or Disable.

If you want to use parallel function, please choose "Enable" and press "Apply" button. Then, "Sync" button will be shown is the screen. Please be sure to click

“ Sync ” button before clicking “ Apply ” button.

There is a “Sync” button in each parameter setting. When “Sync” is clicked and “Apply” is pressed, this new setting will be applied to all inverters. If not, this setting is only effected in current inverter you choose.

**Note:** Without centralized monitoring system, “Sync” function is not effective. Then, you have to set up the inverter one by one through serial communication port.

Parallel for output: Enable

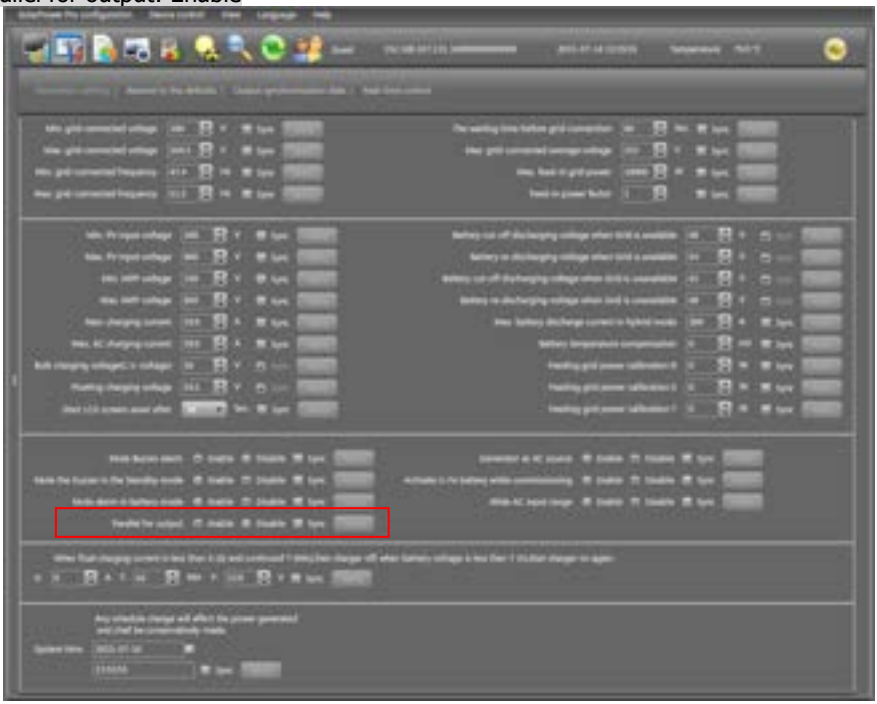

Parallel for output: Disable

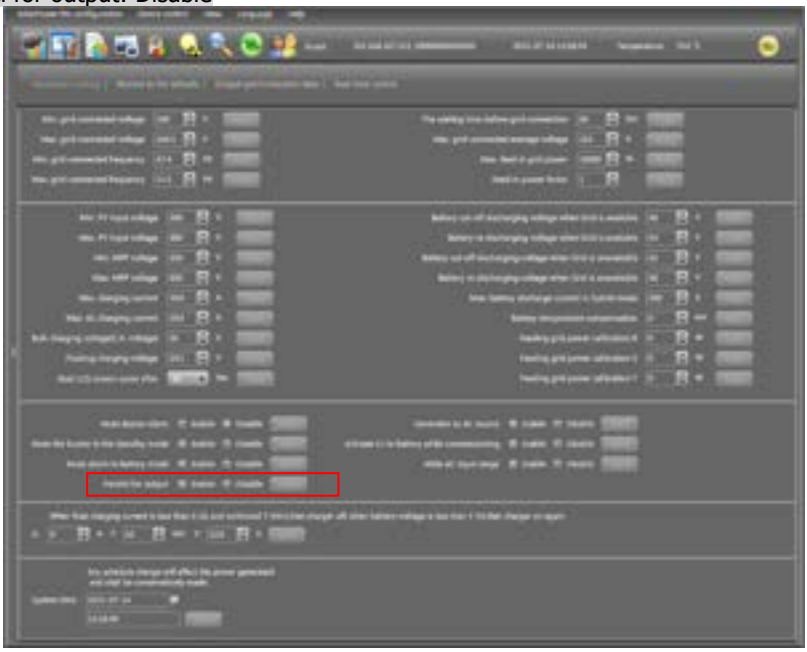

**Fault code display:**

| Fault Code | Fault Event | Icon on |
|---|---|---|
| 60 | Power feedback protection | F60 |
| 71 | Firmware version inconsistent | F71 |
| 72 | Current sharing fault | F72 |
| 80 | CAN fault | F80 |
| 81 | Host loss | F81 |
| 82 | Synchronization loss | F82 |

**Commissioning**

Step 1: Check the following requirements before commissioning:

- Correct wire connection.
- Ensure all breakers in Line wires of load side are open and each Neutral wire of each unit is connected together.

Step 2: Turn on each unit and set "enable parallel for output" on SolarPower or SolarPower Pro. And then, shut down all units.

Step 3: Turn on each unit.

| LCD display in Master unit | LCD display in Slave unit |
|---|---|
| | 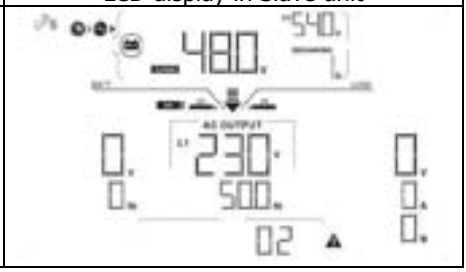 |

**NOTE:** Master and slave units are randomly defined. Warning 02 is AC GRID voltage low.

Step 4: Switch on all AC breakers of Line wires in AC input. It's better to have all inverters connect to utility at the same time. If not, it will display fault 82 in following-order inverters. However, these inverters will automatically restart. If detecting AC connection, they will work normally.

| LCD display in Master unit | LCD display in Slave unit |
|---|---|
| 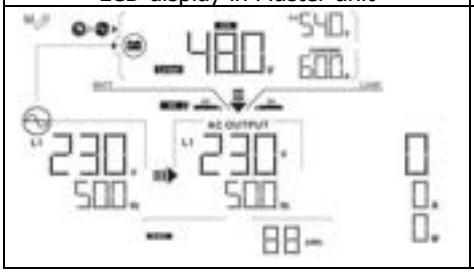 | |

Step 5: If there is no more fault alarm, the parallel system is completely installed.

Step 6: Please switch on all breakers of Line wires in load side. This system will start to provide power to the load.

**Trouble shooting**

| Situation | | Solution |
|---|---|---|
| Fault Code | Fault Event Description | |
| 37 | Over current on Neutral wire | 1. Remove excessive loads.<br>2. Restart the inverter.<br>3. If the problem remains, please contact your installer. |
| 60 | Current feedback into the inverter is detected. | 4. Restart the inverter.<br>5. Check if L1/L2/L3/N cables are not connected with wrong sequence in all inverters.<br>6. Make sure the sharing cables are connected in all inverters.<br>7. If the problem remains, please contact your installer. |
| 61 | Relay board driver loss, | 1. Disconnect all of power source.<br>2. Only connect AC input and press Enter key to let it working in bypass mode.<br>3. Check if the problem happens again or not and feed back the result to your installer. |
| 62 | Relay board communication loss, | |
| 71 | The firmware version of each inverter is not the same. | 1. Update all inverter firmware to the same version.<br>2. After updating, if the problem still remains, please contact your installer. |
| 72 | The output current of each inverter is different. | 1. Check if sharing cables are connected well and restart the inverter.<br>2. If the problem remains, please contact your installer. |
| 80 | CAN data loss | 1. Check if communication cables are connected well and restart the inverter.<br>2. If the problem remains, please contact your installer. |
| 81 | Host data loss | |
| 82 | Synchronization data loss | |

# Appendix II: BMS

1. BMS port pin define:

| | Definition |
|---|---|
| PIN 3 | RS485B |
| PIN 5 | RS485A |
| PIN 8 | GND |

2. After all wires are connected well and the communication between the inverter and battery is successful, it will show successful icon on the LCD screen.

3. Code Reference

Related information code will be displayed on LCD screen. Please check inverter LCD screen for the operation.

| Code | Description |
|---|---|
| b0 | Informs inverter to stop discharging battery. |
| b1 | Informs inverter to stop charging battery |
| b2 | Informs inverter to charge battery. |

# Appendix III: Wi-Fi Operation Guide

## 1. Introduction

Wi-Fi module can enable wireless communication between off-grid inverters and monitoring platform. Users have complete and remote monitoring and controlling experience for inverters when combining Wi-Fi module with SolarPower APP, available for both iOS and Android based device. All data loggers and parameters are saved in iCloud. The major functions of this APP:

- Delivers device status during normal operation.
- Allows to configure device setting after installation.
- Notifies users when a warning or alarm occurs.
- Allows users to query inverter history data.

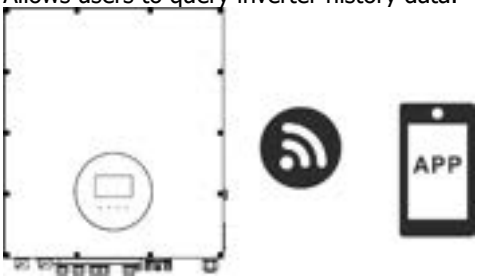


## 2. SolarPower App

### 2-1. Download and install APP

***Operating system requirement for your smart phone:***

iOS system supports iOS 9.0 and above

Android system supports Android 5.0 and above

Please scan the following QR code with your smart phone and download SolarPower App.

Android system

iOS system

Or you may find "SolarPower" app from the Apple® Store or "SolarPower Wi-Fi" in Google® Play Store.

## 2-2. Initial Setup

Step 1: Registration at first time

After the installation, please tap the shortcut icon to access this APP on your mobile screen. In the screen, tap "Register" to access "User Registration" page. Fill in all required information and scan the remote box PN by tapping icon. Or you can simply enter PN directly. Then, tap "Register" button.

Then, a "Registration success" window will pop up. Tap "Go now" to continue setting local Wi-Fi network connection.

Step 2: Local Wi-Fi Module Configuration

Now, you are in "Wi-Fi Config" page. There are detailed setup procedure listed in "How to connect?" section and you may follow it to connect Wi-Fi.

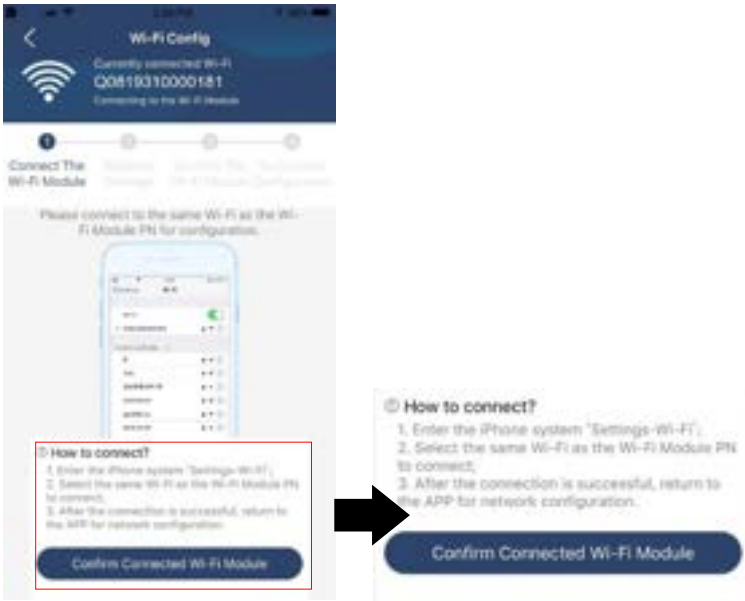


Enter the "Settings→Wi-Fi" and select connected Wi-Fi name. The connected Wi-Fi name is the same to your Wi-Fi PN number and enter default password "12345678".

Then, return to SolarPower APP and tap " Confirm Connected Wi-Fi Module " button when Wi-Fi module is connected successfully.

Step 3: Wi-Fi Network settings

Tap icon to select your local Wi-Fi router name (to access the internet) and enter password.

Step 4: Tap "Confirm" to complete the Wi-Fi configuration between the Wi-Fi module and the Internet.

If the connection fails, please repeat Step 2 and 3.

Diagnose Function

If the module is not monitoring properly, please tap " Diagnosis " on the top right corner of the screen for further details. It will show repair suggestion. Please follow it to fix the problem. Then, repeat the steps in the chapter 4.2 to re-set network setting. After all setting, tap "Rediagnosis" to re-connect again.

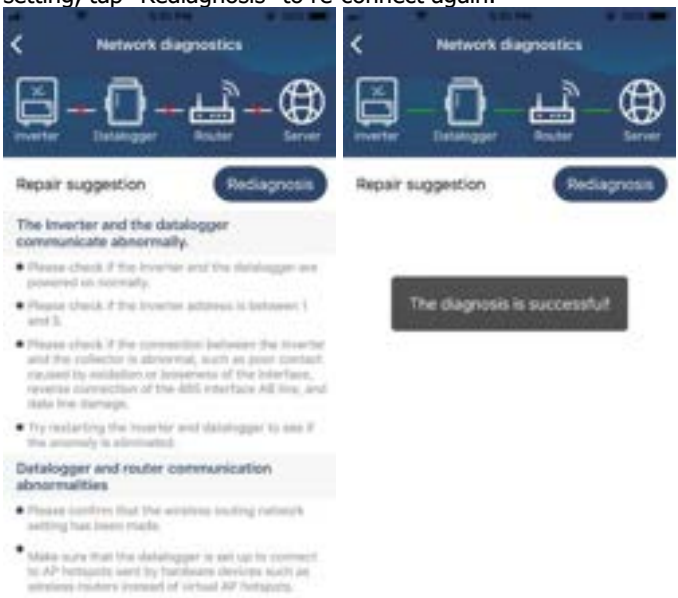

## 2-3. Login and APP Main Function

After finishing the registration and local Wi-Fi configuration, enter registered name and password to login.

Note: Tick "Remember Me" for your login convenience afterwards.

Overview

After login is successfully, you can access "Overview" page to have overview of your monitoring devices, including overall operation situation and Energy information for Current power and Today power as below diagram.

Devices

Tap the icon (located on the bottom) to enter Device List page. You can review all devices here by adding or deleting Wi-Fi Module in this page.

**Add device** **Delete device**

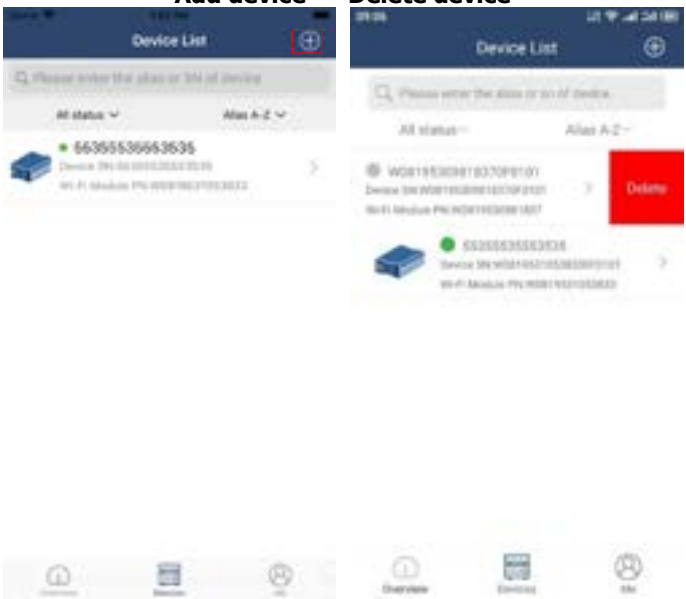


Tap icon on the top right corner and manually enter part number to add device. This part number label is pasted on the bottom of inverter. After entering part number, tap "Confirm" to add this device in the Device list.

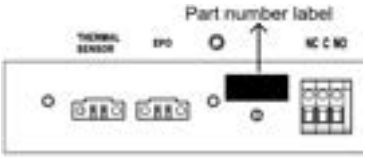


Part number label is pasted on the bottom of inverter.

For more information about Device List, please refer to the section 2.4.

ME

In ME page, users can modify "My information", including【User's Photo】,【Account security】, 【Modify password】,【Clear cache】,and【Log-out】, shown as below diagrams.

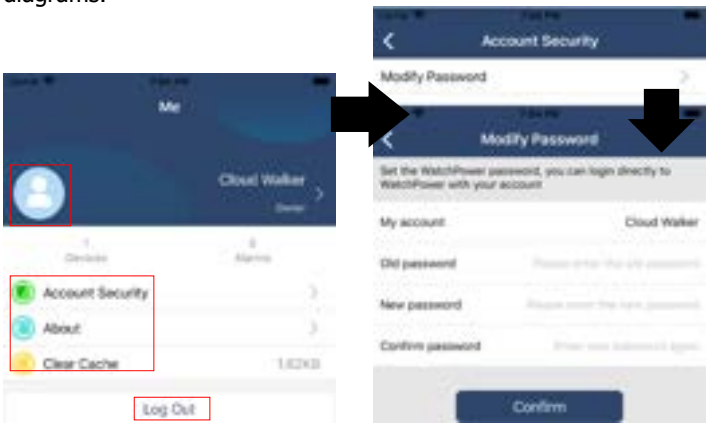


## 2-4. Device List

In Device List page, you can pull down to refresh the device information and then tap any device you want to check up for its real-time status and related information as well as to change parameter settings. Please refer to the parameter setting list.

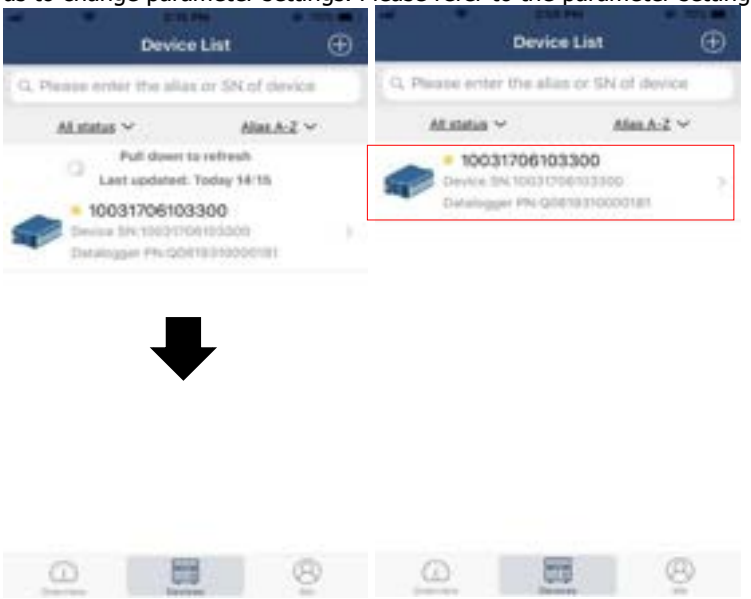

Device Mode

On the top of screen, there is a dynamic power flow chart to show live operation. It contains five icons to present PV power, inverter, load, utility and battery. Based on your inverter model status, there will be【Standby Mode】,【Line Mode】,【Battery Mode】.

**【Standby Mode】** Inverter will not power the load until "ON" switch is pressed. Qualified utility or PV source can charge battery in standby mode.

**【Line Mode】** Inverter will power the load from the utility with or without PV charging. Qualified utility or PV source can charge battery.

**【Battery Mode】** Inverter will power the load from the batter with or without PV charging. Only PV source can charge battery.

## Device Alarm and Name Modification

In this page, tap the icon on the top right corner to enter the device alarm page.

Then, you can review alarm history and detailed information. Tap the icon on the top right corner, a blank input box will pop out. Then, you can edit the name for your device and tap "Confirm" to complete name modification.

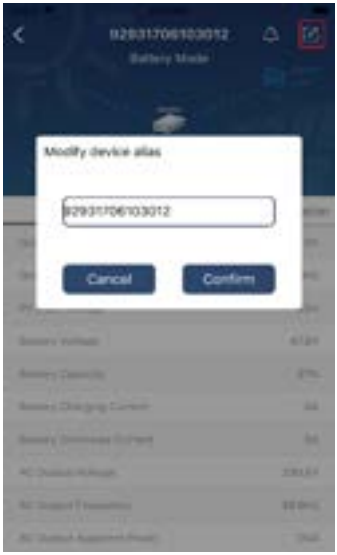


## Device Information Data

Users can check up 【Basic Information】,【Product Information】,【Rated information】,【History】, and【Wi-Fi Module Information】by swiping left.

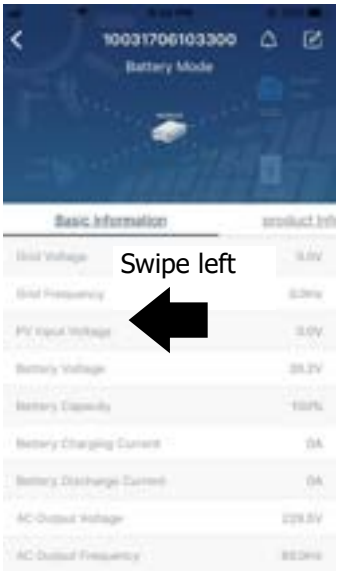


【**Basic Information**】displays basic information of the inverter, including AC voltage, AC frequency, PV input voltage, Battery voltage, Battery capacity, Charging current, Output voltage, Output frequency, Output apparent power, Output active power and Load percent. Please slide up to see more basic information.

【**Production Information**】displays Model type (Inverter type), Main CPU version, Bluetooth CPU version and secondary CPU version.

【**Rated Information**】displays information of Nominal AC voltage, Nominal AC current, Rated battery voltage, Nominal output voltage, Nominal output frequency, Nominal output current, Nominal output apparent power and Nominal output active power. Please slide up to see more rated information.

【**History**】displays the record of unit information and setting timely.

【**Wi-Fi Module Information**】displays of Wi-Fi Module PN, status and firmware version.

Parameter Setting

This page is to activate some features and set up parameters for inverters. Please be noted that the listing in "Parameter Setting" page in below diagram may differ from the models of monitored inverter. Here will briefly highlight some of it,【Output Setting】,【Battery Parameter Setting】,【Enable/ Disable items】,【Other Settings】,【Restore to the defaults】to illustrate.

There are three ways to modify setting and they vary according to each parameter.

a) Listing options to change values by tapping one of it.

b) Activate/Shut down functions by clicking "Enable" or "Disable" button.

c) Changing values by clicking arrows or entering the numbers directly in the column.

Each function setting is saved by clicking "Set" button.

Please refer to below parameter setting list for an overall description and be noted that the available parameters may vary depending on different models. Please always see the original product manual for detailed setting instructions.

**Parameter setting list:**

| Item | | Description |
|---|---|---|
| Output setting | Output source priority | To configure load power source priority. |
| | AC input range | Input voltage range selection |
| | Output voltage | To set output voltage. |
| | Output frequency | To set output frequency. |
| Battery parameter setting | Battery Type | Select connected battery type |
| | Battery Cut-off Voltage | Set battery cut-off voltage |

| | | |
|---|---|---|
| | Bulk Charging Voltage | Set battery bulk charging voltage |
| | Battery Float Voltage | Set battery floating charging voltage |
| | Max Charging Current | To configure total charging current for solar and utility chargers. |
| | Max AC Charging Current | Set maximum utility charging current |
| | Charging Source Priority | To configure charger source priority |
| | Back To Grid Voltage | Set battery voltage to stop discharging when grid is available |
| | Back To Discharge Voltage | Set battery voltage to stop charging when grid is available |
| Enable/Disable Functions | Overload Auto Restart | If disabled, the unit won’t be restarted after overload occurs. |
| | Overload Temperature Auto Restart | If disabled, the unit won't be restarted after over-temperature fault is solved. |
| | Overload Bypass | If enabled, the unit will enter bypass mode when overload occurs. |
| | Beeps While Primary Source Interrupt | If enabled, buzzer will alarm when primary source is abnormal. |
| | Buzzer | If disabled, buzzer won’t be on when alarm/fault occurred. |
| | Backlight | If disabled, LCD backlight will be off when panel button is not operated for 1 minute. |

| | | |
|---|---|---|
| | LCD Screen Return To Default Display | If selected, no matter how users switch display screen, it will automatically return to default display screen (Input voltage /output voltage) after no button is pressed for 1 minute. |
| | Fault Code Record | If enabled, fault code will be recorded in the inverter when any fault happens. |
| | Solar Feed To Grid | If selected, solar energy is allowed to feed to the grid. |
| Other Settings | Solar Supply Priority | Set solar power as priority to charge the battery or to power the load. |
| | Reset PV Energy Storage | If clicked, PV energy storage data will be reset. |
| | Start Time For Enable AC Charge Working | The setting range of start charging time for AC charger is from 00:00 to 23:00. The increment of each click is 1 hour. |
| | Ending Time For Enable AC Charge Working | The setting range of stop charging time for AC charger is from 00:00 to 23:00. The increment of each click is 1 hour. |
| | Scheduled Time For AC Output On | The setting range of scheduled time for AC output on is from 00:00 to 23:00. The increment of each click is 1 hour. |
| | Scheduled Time For AC Output Off | The setting range of scheduled time for AC output off is from 00:00 to 23:00. The increment of each click is 1 hour. |
| | Country Customized Regulations | Select inverter installed area to meet local regulation. |
| | Set Date Time | Set date time. |
| Restore to the default | This function is to restore all settings back to default settings. | |